SHARP SERVICE MANUAL

CODE : 00ZMXM182/S1E

(With optional SPF/RSPF installed)

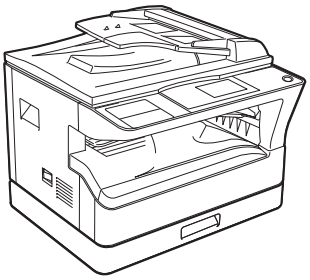

MX-M182/M182D

(With optional SPF/RSPF installed)

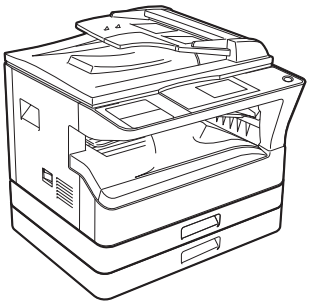

MX-M202D/M232D

DIGITAL MULTIFUNCTIONAL SYSTEM

MODEL MX-M182 MX-M182D MX-M202D MX-M232D

CONTENTS

[1] GENERAL . . . . . 1 - 1
[2] CONFIGURATION . . . . . 2 - 1
[3] SPECIFICATIONS . . . . . 3 - 1
[4] CONSUMABLE PARTS . . . . . 4 - 1
[5] EXTERNAL VIEWS AND INTERNAL STRUCTURES . . . . . 5 - 1
[6] ADJUSTMENTS . . . . . 6 - 1
[7] SIMULATIONS . . . . . 7 - 1
[8] TROUBLE CODE LIST . . . . . 8 - 1
[9] MAINTENANCE . . . . . 9 - 1
[10] DISASSEMBLY AND ASSEMBLY . . . . . 10 - 1
[11] OPERATIONAL DESCRIPTIONS . . . . . 11 - 1
[12] FLASH ROM VERSION UP PROCEDURE . . . . . 12 - 1
[13] IP ADDRESS SETTING . . . . . 13 - 1
[14] ELECTRICAL SECTION . . . . . 14 - 1

Parts marked with "⚠" are important for maintaining the safety of the set.
Be sure to replace these parts with specified ones for maintaining the safety and performance of the set.

SHARP CORPORATION

This document has been published to be used for after sales service only.
The contents are subject to change without notice.

CAUTION

This product is a class 1 laser product that complies with 21CFR 1040.10 and 1040.11 of the CDRH standard and IEC825. This means that this machine does not produce hazardous laser radiation. The use of controls, adjustments or performance of procedures other than those specified herein may result in hazardous radiation exposure.
This laser radiation is not a danger to the skin, but when an exact focusing of the laser beam is achieved on the eye's retina, there is the danger of spot damage to the retina.
The following cautions must be observed to avoid exposure of the laser beam to your eyes at the time of servicing.

1) When a problem in the laser optical unit has occurred, the whole optical unit must be exchanged as a unit, not as individual parts.
2) Do not look into the machine with the main switch turned on after removing the developer unit, toner cartridge, and drum cartridge.
3) Do not look into the laser beam exposure slit of the laser optical unit with the connector connected when removing and installing the optical system.
4) The middle frame contains the safety interlock switch.
   Do not defeat the safety interlock by inserting wedges or other items into the switch slot.

Warning!
This product is a class A product.
If it is operated in households, offices or similar surroundings, it can produce radio interferences at other appliances, so that the user has to take adequate countermeasures.

VAROITUS!
LAITTEEN KÄYTTÄMINEN MUULLA KUIN TÄSSÄ KÄYTTÖOHJEESSA MAINITULLA TAVALLA SAATTAA ALTISTAA KÄYTTÄJÄN TURVALLISUUSLUOKAN 1 YLITTÄVÄLLE NÄKYMÄTTÖMÄLLE LASERSÄTEILYLLE.

VARNING
OM APPARATEN ANVÄNDS PÅ ANNAT SÄTT ÄN I DENNA BRUKSANVISNING SPECIFICERATS, KAN ANVÄNDAREN UTSÄTTAS FÖR OSYNLIG LASERSTRÅLNING, SOM ÖVERSKRIDER GRÄNSEN FÖR LASERKLASS 1.

CAUTION
INVISIBLE LASER RADIATION,
WHEN OPEN AND INTERLOCKS DEFEATED. AVOID EXPOSURE TO BEAM.

VORSICHT
UNSICHTBARE LASERSTRAHLUNG,
WENN ABDECKUNG GEÖFFNET UND SICHERHEITSVERRIEGELUNG ÜBERBRÜCKT. NICHT DEM STRAHL AUSSETZEN.

VARO !
AVATTAESSA JA SUOJALUKITUS OHITETTAESSA OLET ALTTIINA NÄKYMÄTTÖMÄLLE LASERSÄTEILYLLE ÄLÄ KATSO SÄTEESEEN.

ADVARSEL
USYNLIG LASERSTRÅLNING VED ÅBNING, NÅR SIKKERHEDSBRYDERE ER UDE AF FUNKTION. UNDGÅ UDSAETTELSE FOR STRÅLNING.

VARNING !
OSYNLIG LASERSTRÅLNING NÄR DENNA DEL ÄR ÖPPNAD OCH SPÄRREN ÄR URKOPPLAD. BETRAKTA EJ STRÅLEN. – STRÅLEN ÄR FARLIG.

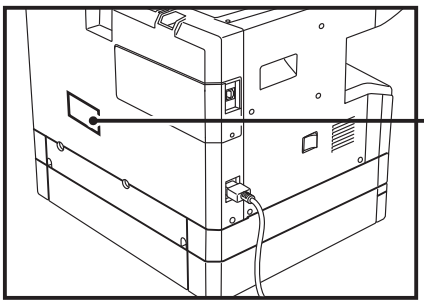

Disconnect the AC cord before servicing the unit.

LASER WAVE - LENGTH : 785 ± 15mm
Pulse times : 10.34 μs ± 0.1μs/7mm ; MX-M182, MX-M182D, MX-M202D
8.665 μs ± 0.1μs/7mm ; MX-M232D
Out put power : Max. 0.3mW

CONTENTS

[1] GENERAL

1. Note for servicing . . . . . 1 - 1

[2] CONFIGURATION

1. System Configurations . . . . . 2 - 1

[3] SPECIFICATIONS

1. Copy mode . . . . . 3 - 1
2. Print mode . . . . . 3 - 4
3. Scanner mode . . . . . 3 - 8

[4] CONSUMABLE PARTS

1. Supply system table . . . . . 4 - 1
2. Environmental conditions . . . . . 4 - 2
3. Production number identification . . . . . 4 - 3

[5] EXTERNAL VIEWS AND INTERNAL STRUCTURES

1. Appearance . . . . . 5 - 1
2. Internal . . . . . 5 - 2
3. Operation Section . . . . . 5 - 3
4. Motor, solenoid, clutch . . . . . 5 - 4
5. Sensor, switch . . . . . 5 - 5
6. PWB unit . . . . . 5 - 6
7. Cross sectional view . . . . . 5 - 7

[6] ADJUSTMENTS

1. Adjustment item list . . . . . 6 - 1
2. Copier adjustment . . . . . 6 - 1

[7] SIMULATIONS

1. Entering the simulation mode . . . . . 7 - 1
2. Canceling the simulation mode . . . . . 7 - 1
3. List of simulations . . . . . 7 - 1
4. Contents of simulations . . . . . 7 - 3

[8] TROUBLE CODE LIST

1. Trouble code list . . . . . 8 - 1
2. Details of trouble codes . . . . . 8 - 1
3. Communication result code . . . . . 8 - 6

[9] MAINTENANCE

1. Maintenance table . . . . . 9 - 1
2. Maintenance display system . . . . . 9 - 2
3. Note for replacement of consumable parts . . . . . 9 - 2

[10] DISASSEMBLY AND ASSEMBLY

1. High voltage section/Duplex transport section . . . . . 10 - 1
2. Optical section . . . . . 10 - 2
3. Fusing section . . . . . 10 - 4
4. Paper exit section . . . . . 10 - 7
5. MCU . . . . . 10 - 10
6. Optical frame unit . . . . . 10 - 10
7. LSU . . . . . 10 - 10
8. Tray paper feed section/Paper transport section . . . . . 10 - 11
9. Bypass tray section . . . . . 10 - 12
10. Power section . . . . . 10 - 14
11. Developing section . . . . . 10 - 15
12. Process section . . . . . 10 - 16
13. Others . . . . . 10 - 17

[11] OPERATIONAL DESCRIPTIONS

1. Paper feed operation . . . . . 11 - 1

[12] FLASH ROM VERSION UP PROCEDURE

1. Preparation . . . . . 12 - 1
2. Download procedure . . . . . 12 - 1
3. Version confirming procedure . . . . . 12 - 3
4. Facsimile Data upload procedure . . . . . 12 - 4
5. Updating the MX-NB12 firmware . . . . . 12 - 5
6. Installation procedure . . . . . 12 - 6

[13] IP ADDRESS SETTING

1. Setting the ip address of the machine by system settings . . . . . 13 - 1

[14] ELECTRICAL SECTION

1. Block diagram . . . . . 14 - 1
2. Actual wiring diagram . . . . . 14 - 2

[1] GENERAL

1. Note for servicing

Pictogram

The label (⚠ ⚠) in the fusing area of the machine indicates the following:

⚠ : Caution, risk of danger

⚠ : Caution, hot surface

A. Warning for servicing

- The fusing area is hot. Exercise care in this area when removing misfeed paper.
- Do not disassemble the laser unit. Do not insert a reflective material such as a screwdriver in the laser beam path.
  It may damage eyes by reflection of laser beams.

B. Cautions for servicing

- Do not switch the machine rapidly on and off. After turning the machine off, wait 10 to 15 seconds before turning it back on.
- Machine power must be turned off before installing any supplies.
- Place the machine on a firm, level surface.
- Do not install the machine in a humid or dusty location.
- When the machine is not used for a long time, for example, during prolonged holidays, turn the power switch off and remove the power cord from the outlet.
- When moving the machine, be sure to turn the power switch off and remove the power cord from the outlet.
- Do not cover the machine with a dust cover, cloth or plastic film while the power is on. Doing so may prevent heat dissipation, damaging the machine.
- Use of controls or adjustments or performance of procedures other than those specified herein may result in hazardous laser radiation exposure.
- The socket-outlet shall be installed near the machine and shall be easily accessible.

C. Note for installation place

Improper installation may damage the machine. Please note the following during initial installation and whenever the machine is moved.

Caution : If the machine is moved from a cool place to a warm place, condensation may form inside the machine. Operation in this condition will cause poor copy quality and malfunctions. Leave the machine at room temperature for at least 2 hours before use.

Do not install your machine in areas that are:

- damp, humid, or very dusty

- poorly ventilated

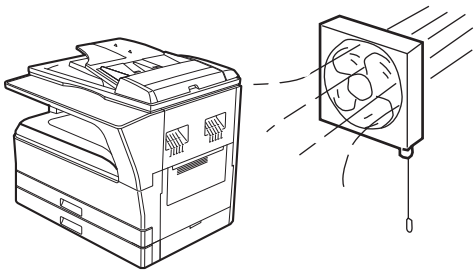

- exposed to direct sunlight

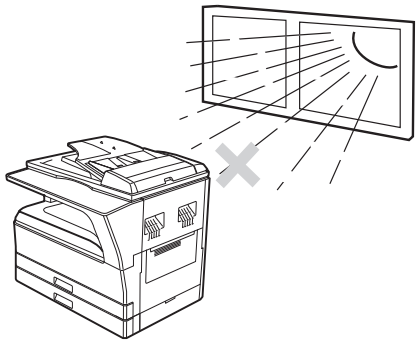

- subject to extreme temperature or humidity changes, e.g., near an air conditioner or heater.

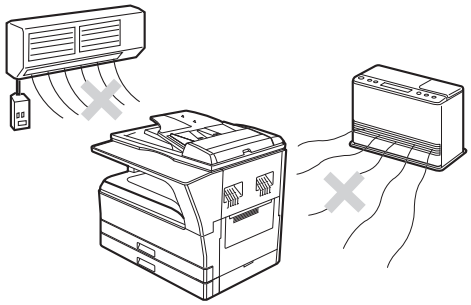

The machine should be installed near an accessible power outlet for easy connection and disconnection.

Be sure to connect the power cord only to a power outlet that meets the specified voltage and current requirements. Also make certain the outlet is properly grounded.

Note : Connect the machine to a power outlet which is not used for other electric appliances. If a lighting fixture is connected to the same outlet, the light may flicker.

Be sure to allow the required space around the machine for servicing and proper ventilation.

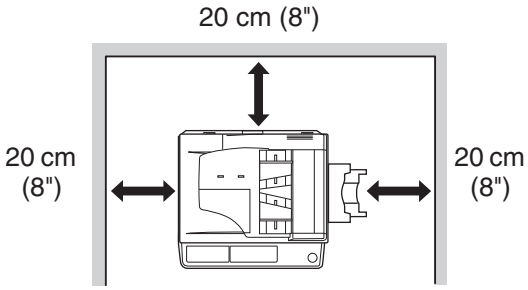

D. Note for handling PWB and electronic parts

When handling the PWB and the electronic parts, be sure to observe the following precautions in order to prevent against damage by static electricity.

1) When in transit or storing, put the parts in an anti-static bag or an anti-static case and do not touch them with bare hands.

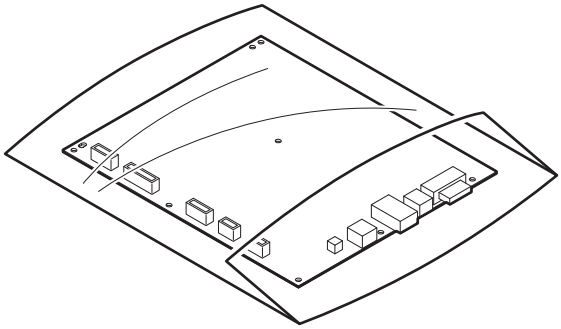

2) When and after removing the parts from an anti-static bag (case), use an earth band as shown below:
   •Put an earth band to your arm, and connect it to the machine.

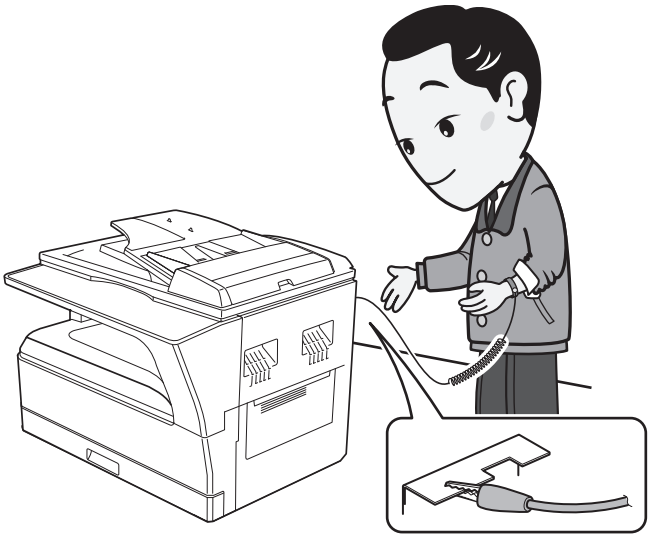

3) When repairing or replacing an electronic part, perform the procedure on an anti-static mat.

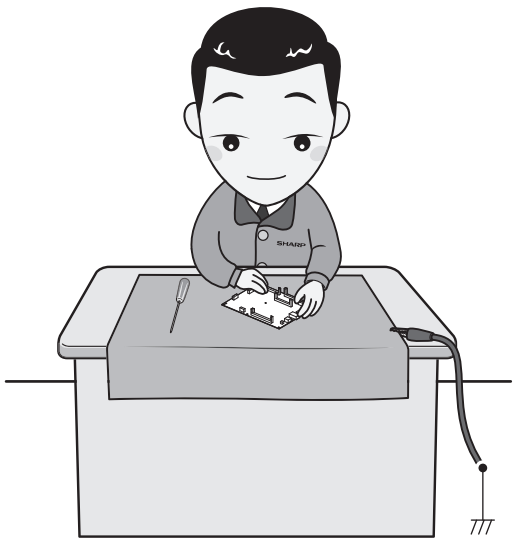

[2] CONFIGURATION

1. System Configurations

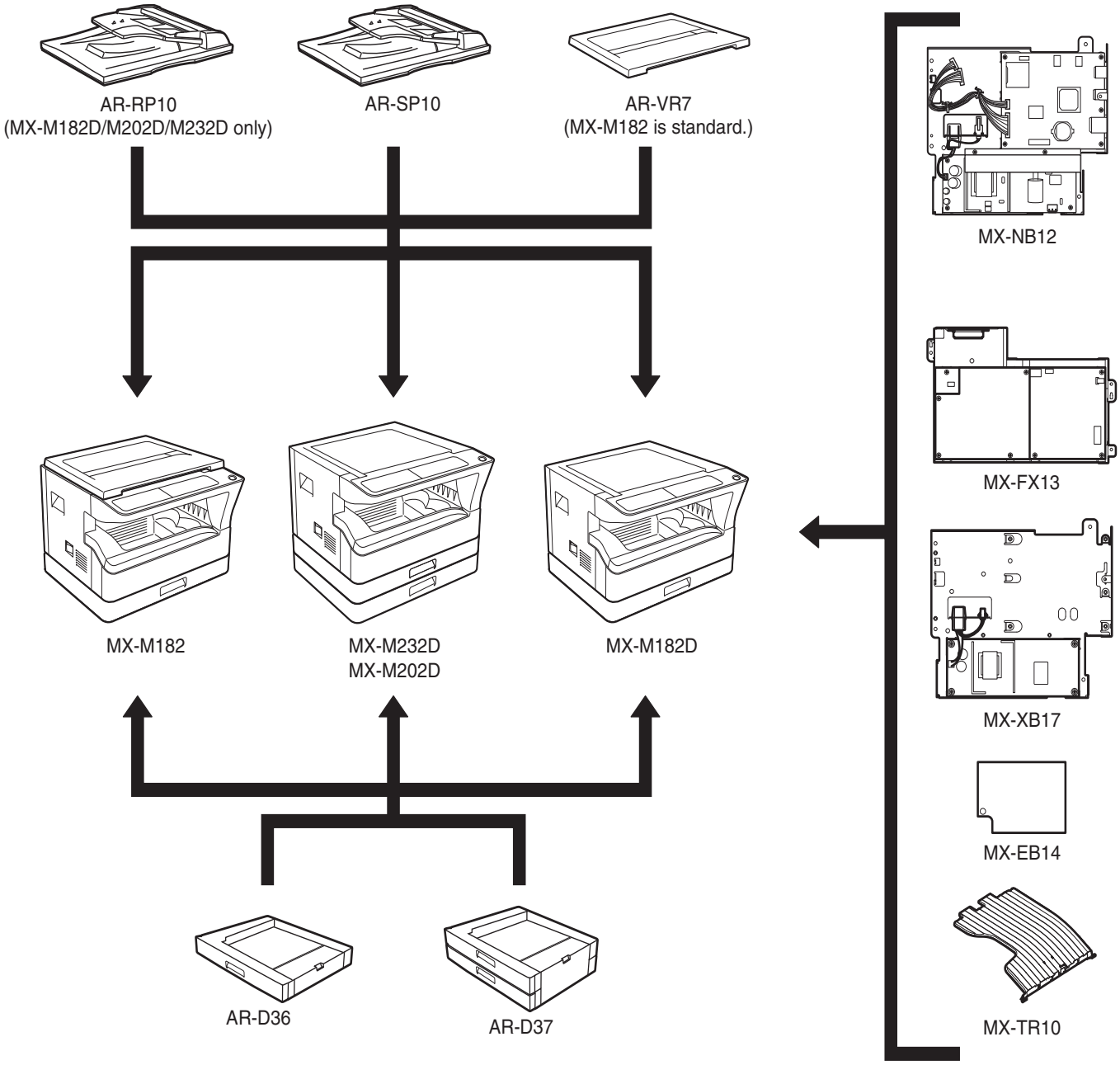

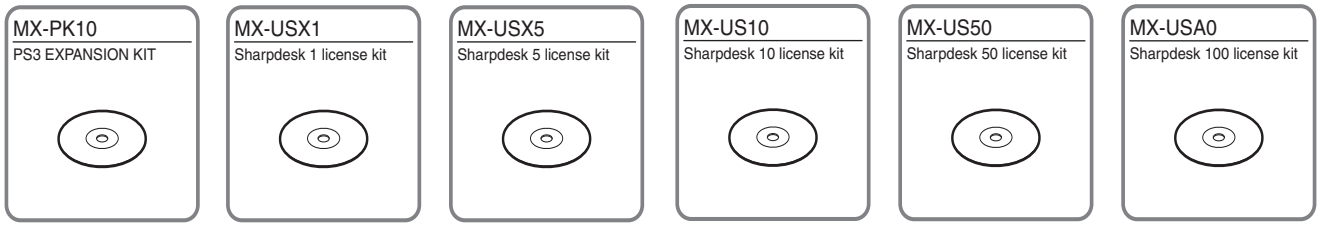

Option	Model	MX-M182	MX-M182D/M202D/M232D
AR-RP10	Reversing single pass feeder (RSPF)	X	O*1
AR-SP10	Single pass feeder (SPF)	O	O*2
AR-D36	250-sheet paper feed unit	O	O
AR-D37	2x250-sheet paper feed unit	O	O
AR-VR7	DOCUMENT COVER	STD	O*2
MX-NB12	NETWORK EXPANSION KIT	O	O
MX-FX13	FACSIMILE EXPANSION KIT	O*3	O*3
MX-XB17	FACSIMILE MOUNTING KIT	O	O
MX-TR10	JOB SEPARATOR	O	O
MX-EB14	EXPANSION MEMORY BOARD	O	O
MX-PK10	PS3 EXPANSION KIT	O*4	O*4
MX-USX1	SHARPDESK 1 LICENSE KIT	O	O
MX-USX5	SHARPDESK 5 LICENSE KIT	O	O
MX-US10	SHARPDESK 10 LICENSE KIT	O	O
MX-US50	SHARPDESK 50 LICENSE KIT	O	O
MX-USA0	SHARPDESK 100 LICENSE KIT	O	O

STD: Standard O: Option installation enable X: Option installation disable

*1 Standard for U.S.A

*2 Not available for U.S.A

*3 MX-NB12 or MX-XB17 is required.

*4 MX-NB12 is required.

[3] SPECIFICATIONS

1. Copy mode

A. Type

Type	Desk-top
Paper exit	center tray / internal

B. Machine composition

MX-M182 MX-M182D	18-CPM multi function model
MX-M202D	20-CPM multi function model
MX-M232D	23-CPM multi function model

(1) Option

Machine	Model	
250-sheet paper feed unit	AR-D36	MX-M182/M182D/M202D/ M232D
2x250-sheet paper feed unit	AR-D37	MX-M182/M182D/M202D/ M232D
SPF	AR-SP10	MX-M182/M182D/M202D/ M232D
RSPF*1	AR-RP10	MX-M182D/M202D/M232D
Network expansion kit	MX-NB12	MX-M182/M182D/M202D/ M232D
Document cover	AR-VR7	MX-M182D/M202D/M232D
Job separator	MX-TR10	MX-M182/M182D/M202D/ M232D
PS3 Expantion kit	MX-PK10	MX-M182/M182D/M202D/ M232D
Facsimile expantion kit	MX-FX13	MX-M182/M182D/M202D/ M232D
Facsimile mounting kit	MX-XB17	MX-M182/M182D/M202D/ M232D
Expantion memory board	MX-EB14	MX-M182/M182D/M202D/ M232D

*1: Standard for North America and Latin America.

C. Copy speed

(1) Engine speed (ppm)

Paper size	MX-M232D	MX-M202D	MX-M182 MX-M182D
A4/8.5" x 11"	23ppm	20ppm	18ppm
A4R/8.5" x 11"R	15/16ppm	14/15ppm	14/15ppm
A5/5.5"x8.5"	23ppm	20ppm	18ppm
B5/16K	23ppm	20ppm	18ppm
B5R/16KR	18/16ppm	16/15ppm	16/15ppm
8.5"x13"	13ppm	12ppm	12ppm
B4/8.5"x14"	13ppm	12ppm	12ppm
A3/11"x17"/8K	12/11/12ppm	11/10/11ppm	11/10/11ppm

(2) Engine performance when printing

Model	23cpm machine	20cpm machine	18cpm machine
ROPM OFF	12ppm or more	12ppm or more	12ppm or more
ROPM ON	23ppm	20ppm	18ppm

(3) Document replacement speed (Copy mode)

Copy mode	MX-M232D	MX-M202D	MX-M182 MX-M182D
S to S	20cpm (87%)	20cpm (100%)	18cpm (100%)

S to S : A4/8.5" x 11" document 11 sheets, copy 1 set (Excluding the first copy)

(4) Job efficiency

Copy mode	MX-M232D	MX-M202D	MX-M182 MX-M182D
S to S	18cpm (78%)	18cpm (90%)	15cpm (83%)
S to D	10cpm (43%)	10cpm (50%)	10cpm (56%)
D to D	10cpm (43%)	10cpm (50%)	10cpm (56%)

S to S : A4/8.5" x 11" document 10 sheets, copy 5 sets
S to D : A4/8.5" x 11" document 10 sheets, copy 5 sets
D to D : A4/8.5" x 11" document 10 sheets (20 pages), copy 5 sets

Note : The temperature at the end portion of the heat roller may rise too high, depending on the kind of paper to be used, when in continuous printing of small-size paper.
To avoid this, when the thermistor at the end portion detects a higher temperature than the specified level, output is stopped temporarily.
During temporary stop, Power Save Indicator lamp flashes in the same manner as warming up.

(5) First copy time

Tray	18/20cpm machine	23cpm machine
1st tray	7.2 sec or less	5.9 sec or less

AE mode, A4/Letter, single surface copy with OC, in polygon ready state

D. Document

Max. document size	A3, 11" x 17"
Document reference position	Upper left-hand corner
Detection (Platen)	Yes

E. Paper feed

(1) Paper feed section details

Item		1st tray	2nd tray*1	Bypass tray
Paper capacity		250 sheets	250 sheets	100 sheets
Paper size detection		No (Paper size is set with the operasion panel.)		
Paper type setting		No	No	No (Heavy paper setting is enabled.)
Paper size changing method		The paper guide is set by the user.		
Default paper size when shipping	AB series	A4	A4	-
	Inch series	8 1/2" x11"	8 1/2" x11"	-
Remaining paper quantity detection		Only empty detection available		

*1: 2-stage standard only for the MX-M202D/M232D

(2) Feedable paper

Paper size		1st tray	2nd tray	Bypass tray
A3	297x420	Yes	Yes	Yes
B4	257x364	Yes	Yes	Yes
A4	297x210	Yes	Yes	Yes
A4-R	210x297	Yes	Yes	Yes
B5	257x182	Yes	Yes	Yes
B5R	182x257	Yes	Yes	Yes
A5	210x148.5	Yes	N/A	Yes
A5R	148.5x210	N/A	N/A	Yes
A6R	105x148.5	N/A	N/A	Yes
B6R	128.5x182	N/A	N/A	Yes
Ledger 11x17 in	279.4x431.8	Yes	Yes	Yes
Legal 8.5x14in.	215.9x355.6	Yes	Yes	Yes
8.5x13.4 *1	216x340 *1	*1	*1	*1
Foolscap 8.5x13 in	215.9x330.2	Yes	Yes	Yes
Letter 11x8.5in	279.4x215.9	Yes	Yes	Yes
Letter-R 8.5x11in	215.9x279.4	Yes	Yes	Yes
Executive-R 7.25x10.5in.	184.2x266.7	N/A	N/A	Yes
Invoice 8.5x5.5 in.	215.9x139.7	Yes	N/A	Yes
Invoice-R 5.5x8.5 in	139.7x215.9	N/A	N/A	Yes
8K	270x390	Yes	Yes	Yes
16K	270x195	Yes	Yes	Yes
16KR	195x270	Yes	Yes	Yes
COM10	104.8x241.3	N/A	N/A	Yes

*1: Switches by SIM26-2. (Operation UI supports by 8.5x13 and exclusion.)

(3)Types of feedable paper

Types of paper		1st tray	2nd tray	Bypass tray
Thin paper	56-59g/m^2 15-15.9lbs	Yes	Yes	Yes
Plain paper	60-90g/m^2 16-24lbs	Yes	Yes	Yes
Heavy paper	91-105g/m^2 16-24lbs	N/A	N/A	Yes (Multi paper feed enable)
Heavy paper	106-128g/m^2 24.1-33.5lbs	N/A	N/A	Yes (A4 or less) (Multi paper feed enable)
Heavy paper	129-200g/m^2 33.6-53.2lbs	N/A	N/A	Yes (A4 or less) (Only single paper feed)
Heavy paper	201-256g/m^2 53.3-68lbs	N/A	N/A	N/A
Envelope	75-90g/m^2 20-24lbs	N/A	N/A	Yes
Postcard		N/A	N/A	Yes
OHP film		N/A	N/A	Yes
Label sheet		N/A	N/A	Yes
Tab paper 20		N/A	N/A	N/A

F. Multi copy

Max. number of multi copy	999 sheets

G. Warm-up time

Warm-up time	25 seconds or less
Pre-heat	Available
Jam recovery	Within 25 sec

H. Copy magnification ratio

Fixed magnification ratio	AB system: 400, 200, 141, 122, 115, 100, 86, 81, 70, 50, 25%
	Inch system: 400, 200, 141, 129, 121, 100, 95, 77, 64, 50, 25%
Zooming	25 ~ 400% SPF/RSPF (50 ~ 200%)
Independent zooming (vertical)	Available (25 ~ 400%) SPF/RSPF (50 ~ 200%)
Independent zooming (horizontal)	Available (25 ~ 400%) SPF/RSPF (50 ~ 200%)

I. Copy density

Density mode	Auto / Text / Photo
No. of manual adjustment	5 steps (Text / Photo)
Resolution	Writing: 600 x 600dpi Reading: 400 (main) x 600 (sub) (PHOTO mode) 400 (main) x 600 (sub) (AUTO exposure mode) 400 (main) x 600 (sub) dpi (TEXT mode)
Gradation	Reading: 256 gradations Writing: Binary

J. Void width

Void area	Lead edge 1 ~ 4mm Rear edge 4mm or less Total of both sides: 6mm or less		
Image loss	OC	Same size	3mm or less
	SPF/RSPF	Same size	4mm or less

K. Auto duplex

Standard/ Option	Standard provision (MX-M182D/M202D/M232D only) (D→ D / D → S enable only when RSPF is installed) Not available for MX-M182

L. Paper exit / finishing

Paper exit section capacity	Face down 250 sheets
Full detection	Upper stage: Yes (Job separator is installed) Lower stage: No (Copy/printer 250 sheets count detection)
Finishing	None
Electronic sort capacity	A4/ 8.5" x 11" standard document (6% coverage) 160 sheets
Offset function	Yes
Staple function	None

M. Additional functions

	MX-M182	MX-M182D/M202D/M232D
APS	O	
AMS	O	
Auto tray switching	O	
Memory copy	O	
Rotation copy	O	
E-sort (Sorting function)	O	
E-sort (Grouping function)	O	
Rotation sort	X	
Prevention of sky shot	X	
Independent zooming	O	
1 set 2 copy	O SPF: Disable OC: Enlargement is disable.	O SPF/RSPF: Disable OC: Enlargement is disable.
Binding margin	O Default AB series: 10mm (5, 10, 15, 20mm) Inch series: 1/2 inch (1/4, 1/2, 3/4, 1 inch)	
Edge erase		
Center erase		
Black/white reverse	X	
2in1/4in1	O	
Offset	O	
Preheating	O The conditions are set by the system setting.	
Auto shut-off	O The conditions are set by the system setting.	
System setting	O	
Counter	O (1) Copy total (2) Print total (3) Scan (4) Toner residual quantity	
Coin vendor support	O (Supporting the interface only)	
Auditor support	O (Supporting the interface only)	
Duplex	X	O
Toner save	O (Set according to the destination)	
Account control	O (Copy/Printer/Scanner Number of control: 50)	

O : Available X : Not available

N. Other specifications

Photoconductor type	OPC (Organic Photo Conductor)
Photoconductor drum dia.	30mm
Copy lamp	WhiteCCFL
Developing system	Dry 2-component magnetic brush development
Charging system	Saw teeth charging
Transfer system	(+) DC corotron
Separation system	(-) DC corotron
Fusing system	Heat roller
Cleaning system	Contact blade

O. Package form

Body	Body / Accessories

P. External view

	Standard model	D model
External dimensions (With the bypass tray closed)	591mm(W) x 573mm(D)	
Occupying area (With the bypass tray opened)	883mm(W) x 573mm(D)	
Weight (Excluding developer)	1-tray model: 29.4kg	1-tray model: 29.6kg (OC) 2-tray model: 35.0kg (OC) 1-tray model: 33.2kg (RSPF) 2-tray model: 38.6kg (RSPF)

Q. Power source

Voltage	100 - 127V 220 - 240V
Frequency	50/60Hz common

R. Power consumption

Max. power consumption	1200W

S. Digital performance

Resolution	Reading	400 x 600dpi (PHOTO mode) 400 x 600dpi (AUTO exposure mode) 400 (main) x 600 (sub) dpi (TEXT mode)
	Writing	600 x 600dpi
Gradation	Reading	256 gradations
	Writing	Binary
Memory (MAX)	256MB (with MX-EB14)	
Hard disk	None	

2. Print mode

A. Printing function

(1) Platform

Item	Content
Support platform	IBM PC/AT compatible machine

(2) Support OS

OS		Main unit		When MX-NB12 is installed				When MX-FX13 is installed
		Twain/Button Manager	SPLC	Custom PCL6	Custom PCL5e	Custom PS	PPD	PC-FAX
Windows	98/Me	No	No	No	No	No	No	No
	NT 4.0 SP5 or later	No	No	No	No	No	No	No
	2000	CD-ROM	CD-ROM	CD-ROM	No	CD-ROM	CD-ROM	CD-ROM
	XP	CD-ROM	CD-ROM	CD-ROM	No	CD-ROM	CD-ROM	CD-ROM
	XPx64	CD-ROM	CD-ROM	CD-ROM	No	CD-ROM	CD-ROM	CD-ROM
	Server 2003	No	No	CD-ROM	No	CD-ROM	CD-ROM	CD-ROM
	Server 2003x64	No	No	CD-ROM	No	CD-ROM	CD-ROM	CD-ROM
	Vista	CD-ROM	CD-ROM	CD-ROM	No	CD-ROM	CD-ROM	CD-ROM
	Vistax64	CD-ROM	CD-ROM	CD-ROM	No	CD-ROM	CD-ROM	CD-ROM
	Server 2008	No	No	CD-ROM	No	CD-ROM	CD-ROM	CD-ROM
	Server 2008x64	No	No	CD-ROM	No	CD-ROM	CD-ROM	CD-ROM
	Windows 7	CD-ROM	CD-ROM	CD-ROM	No	CD-ROM	CD-ROM	CD-ROM
	Windows 7x64	CD-ROM	CD-ROM	CD-ROM	No	CD-ROM	CD-ROM	CD-ROM
Mac	9.0-9.2.2	No	No	No	No	No	No	No
	X 10.2.8	No	No	No	No	No	Web	No
	X 10.3.9	No	No	No	No	No	Web	No
	X 10.4.11	No	No	No	No	No	CD-ROM	No
	X 10.5- 10.5.8	No	No	No	No	No	CD-ROM	No
	X 10.6-10.6.4	No	No	No	No	No	CD-ROM	No

(3) Printer driver function

a. Windows version of SPLC driver

Function		Overseas	Description
Main	Copies	1-999	Perform specified numbers of printing.
	Collate	Collate Uncollate	If "Collate" is specified, plural printing by the number of set is done, and "Uncollate" is specified, plural printing by page is done.
	Document Style	1-sided 2-sided (Book) 2-sided (Tablet)	Simplex or duplex printing is done depending on the setting. Print direction is different depending on book/tablet for duplex printing. (* Simplex model have no duplex function.)
	N-up	2/4/6	Specified numbers of pages are printed on one sheet.
	N-up Order	Z	
	N-up Border	Yes / No	Partition line is added for the plural pages printed on 1 sheet.
	User Setting	Add/Delete	Register the setting value for commonly-used driver.
	Image Orientation	Portrait Landscape	Print in the specified print direction.
	Rotate 180 Degree	Yes / No	Rotate data 180 degrees to print.
Paper	Paper Size (paper size)	A3 / B4 / A4 / B5 / A5 / A6 / B6 / Ledger / Legal/ 8.5x13.4 / Foolscap / Folio / Letter / Invoice / Executive / 8K / 16K / COM-10 / DL / C5 / A2(Fit To Page) / Custom *1	Print in the specified paper size. Even if actual paper size is different from the specified paper size, the image is created in the specified paper size to print.
	Custom Paper Size (paper size)	1 size	Width: 100 - 297mm Length: 148 - 431.8mm
	Fit to Page (Zoom setting)	Yes/No	Print size is changed according to the specified contents.
	Zoom (Zoom setting)	25-400%	
	Fit to Page size (Zoom setting)	A3 / B4 / A4 / B5 / A5 / A6 / B6 / Ledger / Legal / 8.5x13.4/ Foolscap / Folio / Letter / Invoice / Executive / 8K / 16K / COM-10 / DL / C5	
	Paper Selection	Auto Bypass (Auto) Bypass (Manual) Tray 1/2 (3/4)	Paper is fed from the specified paper feed tray.
	Output	Center Tray / Upper Tray	

Function		Overseas	Description
Advanced	Brightness (Image adjustment)	0 - 100%	Adjust the brightness of the image by moving the scale within the range of 0-100. The illustration image at the upper left of the screen changes by this adjustment.
	Contrast (Image adjustment)	0 - 100%.	Adjust the contrast of the image by moving the scale within the range of 0-100. The illustration image at the upper left of the screen changes by this adjustment
	Text To Black	Yes / No	Print documents created by CAD software in B/W to improve visualization of colored line image/text.
	Vector To Black	Yes / No	Print lines in BW to improve visualization.
	Input Resolution (compatibility)	600dpi/300dpi	Select input resolution (default: 600dpi)
	Hatching Pattern (compatibility)	Standard/fine	Select hatching pattern (default: standard)
	Spool format (compatibility)	RAW/EMF	Default: RAW
	Reduction Method (compatibility)	Standard/By Object/ By page	Default: Standard
	Print density (compatibility)	1 - 5 stages	Default: 3
	Duplex print (Compatibility)	Yes / No	Specify duplex printing function with giving priority to driver.
	Duplex Style (compatibility)	Pattern1/ Pattern2/ Pattern3	Default: 1
	Print by number of copy (compatibility)	Yes / No	Specify print by set function with giving priority to driver.
Water marks	Watermark	None / TOP SECRET / CONFIDENTIAL / DRAFT / ORIGINAL / COPY	Select watermark specified as default.
	User Setting	Add / Update / Delete	Add, register and delete watermark.
	Position	Center X: ±50 Y: ±50	Adjust the position of watermark vertically and horizontally.
	Size	6 - 300	Adjust the size of watermark.
	Angle	±90	Adjust the angle of watermark.
	Grayscale	0 - 255	Adjust the watermark density.
	Edit Font	Yes	Edit font.
	Thick Letter	Yes/No	
	Italic Face	Yes/No	
	Character Set	Yes	
	On First Page only	Yes / No	Put watermark only on the first page.
Option	ROPM	On/Off	
	Paper Feed Option	1-Tray/2-Tray/3-Tray/4-Tray	
	Auto Configuration	Yes	
	Paper Tray (Tray Setting)	Bypass Tray/Tray1/Tray2/Tray3/Tray4	
	Paper Size to Specify	No specification/ A3 / B4 / A4 / B5 / A5 / A6 / B6 / Ledger / Legal / 8.5x13.4 / Foolscap / Folio / Letter / Invoice / Executive / 8K / 16K / COM-10 / DL / C5 / Custom	
	Status Window	Yes	
	Version Information	Yes	

*1: Custom paper size range: Width 100 - 297.0 mm (3.94 -11.69 inch) Length 148 -431.8mm (5.83 - 17.00 inch)

b. Windows version of PCL/PS Driver (PCL: MX-NB12 is expanded)

	Function		PCL6	PS
Main	Copies		1-999	1-999
	Image Orientation		Portrait Landscape	Portrait Landscape
		Rotate 180 Degree	Yes / No	Yes / No
	Collate		Collate Uncollate	Collate Uncollate
	Document Style		1-Sided, 2-Sided(Book) 2-Sided(Tablet), Pamphlet Style (Tiled Pamphlet), Pamphlet Style (2-up Pamphlet)	1-Sided, 2-Sided(Book) 2-Sided(Tablet), Pamphlet Style (Tiled Pamphlet), Pamphlet Style (2-up Pamphlet)
	Job Control	Inform job end	Yes/No	Yes/No
		Account Number Setting	Yes/No (5 digits)	Yes/No (5 digits)
		Confirm Job Control	Yes/No	Yes/No
	Binding Edge		N/A	N/A
	Margin Shift		N/A	N/A
	N-up	N-up	2/4/6/8/9/16	2/4/6/8/9/16
		N-up Order	Z	Z
		N-up Border	Yes/No	Yes/No
Paper	Paper Size	Paper Size	A3 / B4 / A4 / B5 / A5 / B6 / A6 / 11x17 / 8.5x14 / 8.5 x 13.4/ 8.5x13 / 8.5x11 / 5.5x8.5 / Folio / Executive / COM-10 / DL / C5/ 8K / 16K / A0 (Fit To Page) / A1(Fit To Page)/ A2(Fit To Page) / Custom *1	A3 / B4 / A4 / B5 / A5 / B6 / A6 / 11x17 / 8.5x14 / 8.5 x 13.4/ 8.5x13 / 8.5x11 / 5.5x8.5 / Folio / Executive / COM-10 / DL / C5 / 8K / 16K / Custom *1
		Paper Type	N/A	N/A
		Custom Paper Size	1 size	1 size
	Zoom Setting	Fit to Page	Yes/No	Yes/No
		Zoom	25-400% Reference Point: Upper left/Center	N/A
		XY-Zoom	N/A	Width: 25 - 400% Length: 25 - 400% Lock Aspect Ratio: On/Off Reference Point: Upper left/Center
		Fit to Page size	A3 / B4 / A4 / B5 / A5 / B6 / A6 / 11x17 / 8.5x14 / 8.5 x 13.4 / 8.5x13 / 8.5x11 / 5.5x8.5 / Folio / Executive / COM-10 / DL / C5 / 8K / 16K	A3 / B4 / A4 / B5 / A5 / B6 / A6 / 11x17 / 8.5x14 / 8.5 x 13.4 / 8.5x13 / 8.5x11 / 5.5x8.5 / Folio / Executive / COM-10 / DL / C5 / 8K / 16K
	Paper Selection		Auto Bypass (Auto) Bypass (Manual) Tray 1/2/3/4	Auto Auto Bypass (Auto) Bypass (Manual) Tray 1/2/3/4
Advanced	Graphics mode		Raster/Vector	N/A
	Mirror Image		N/A	Horizontal Vertical
	PostScript Option	PS Error Information	N/A	Yes/No
		PS Pass-Through	N/A	Yes/No
	Bitmap Compression		None / Very High Quality / High Quality / Medium Quality / Draft	N/A
	Compression Options	Job Compression	N/A	None / Fastest / Fast / Medium / Best Compression
		Bitmap Compression	N/A	None / Very High Quality / High Quality / Medium Quality / Draft
	Compatibility	Input Resolution	600/300 dpi	N/A
		Halftone Setting	N/A	N/A
		Hatching Pattern	Standard/Fine	N/A
		Spool Format	RAW/EMF	N/A
		Print Density	1-5 Stages	1-5 Stages
		Print by set (Give priority to Driver Setting)	Yes / No	N/A
		Duplex Printing (Give Priority to Driver Setting)	Yes / No	N/A
		Negative Image	N/A	N/A
		Mirror Image	N/A	N/A
		Zoom	N/A	N/A
		Duplex Style	Pattern1/ Pattern2/ Pattern3	Pattern1 / Pattern2 / Pattern3
	Overlay		ON/OFF	ON/OFF
	Font Setting		Yes Resident Font: 80 fonts	Yes Resident Font: 80 fonts

	Function		PCL6	PS
Advanced	Image Adjustment	Brightness	0 - 100%	0 - 100%
		Contrast	0 - 100%	0 - 100%
	Text To Black		Yes / No	Yes / No
	Vector To Black		Yes / No	Yes / No
	Right binding		Yes/No	Yes / No
Water marks	Watermark		None / TOP SECRET / CONFIDENTIAL / DRAFT / ORIGINAL / COPY	None / TOP SECRET / CONFIDENTIAL / DRAFT / ORIGINAL / COPY
	User Setting		Add / Update / Delete	Add / Update / Delete
	Position		Center X: ±50 Y : ±50	Center X: ±50 Y : ±50
	Size		6 - 300	6 - 300
	Angle		±90	±90
	Grayscale		0 - 255	0 - 255
	Edit Font		Yes	Yes
	Thick Letter		Yes/No	Yes/No
	Italic Face		Yes/No	Yes/No
	Character Set		Yes	Yes
	Print Pattern		Transparent 1 / Transparent 2 / Overlap / Outline	Transparent / Overlap / Outline
	Frame Line		None/rectangle/Circle	None/rectangle/Circle
	On First Page only		Yes / No	Yes / No
Special Mode	Page Interleave		Yes	N/A
	Paper Insertion Setting	Different 1st (Cover) and Last Page	1st Page: On/Off (Last Page Not Support)	1st Page : On/Off (Last Page Not Support)
		Duplex Printing	Yes/No	Yes/No
		Paper Tray	Bypass (Auto) Bypass(Manual) Tray 1/2/3/4	Bypass (Auto) Bypass(Manual) Tray 1/2/3/4
		Transparency Inserts	N/A	N/A
		Carbon Copy	N/A	N/A
Option	ROPM		On/Off	On/Off
	Paper Feed Option		1-Tray/2-Tray/3-Tray/4-Tray	1-Tray/2-Tray/3-Tray/4-Tray
	Job Separator		On/Off	On/Off
	Option Auto Setting		Yes	Yes
	Tray Setting	Paper Tray	Bypass Tray/ Tray1/Tray2/Tray3/Tray4	Bypass Tray/ Tray1/Tray2/Tray3/Tray4
		Paper Size to Specify	Not Specified/ A3 / B4 / A4 / B5 / A5 / A6 / B6 / Ledger / Legal / 8.5x13.4 / Foolscap / Folio / Letter / Invoice / Executive / 8K / 16K / COM-10 / DL / C5 / Custom)	Not Specified/ A3 / B4 / A4 / B5 / A5 / A6 / B6 / Ledger / Legal / 8.5x13.4 / Foolscap / Folio / Letter / Invoice / Executive / 8K / 16K / COM-10 / DL / C5 / Custom)
	Print Policy		Yes	Yes
	Font		N/A	Yes
	Version Information		Yes	Yes

*1: Custom paper size range: Width 100 - 297.0 mm (3.94 -11.69 inch) Length 148 -431.8mm (5.83 - 17.00 inch)

C. Windows version/Mac version of PPD Driver

Function	WinPPD	Mac PPD
Copies	Yes	Yes
Collate/Uncollate	Yes	Yes
N-UP	Yes	Yes
N-up Order	No	Yes
N-up Border	No	Yes
Duplex	Yes	Yes
Retention	No	No
Document Filling	No	No
User Authentication	No	No
User Number	No	Yes
Job ID (User Name/ Job Name)	No	Yes
Color Mode	No	No
Print Mode	No	No
Image Type	No	No
Neutral Gray	No	No
Pure Black Print	No	No
Black Over Print	No	No
Toner Save	No	No
Color Adjustment	No	No
Source Profile	No	No
Rendering Intent	No	No
Output Profile	No	No
Screening	No	No
Simulation Profile	No	No
Paper Size	A3 / B4 / A4 / B5 / A5 / B6 / A6 / 11x17 / 8.5x14 / 8.5 x 13.4/ 8.5x13 / 8.5x11 / 5.5x8.5 / Folio / Executive / COM-10 / DL / C5/ 8K / 16K/ Custom*1	A3 / B4 / A4 / B5 / A5 / B6 / A6 / 11x17 / 8.5x14 / 8.5 x 13.4/ 8.5x13 / 8.5x11 / 5.5x8.5 / Folio / Executive / COM-10 / DL / C5 / 8K / 16K / A0 (Fit To Page) / A1 (Fit To Page) / A2 (Fit To Page) / Custom*1
Output Tray	Upper Tray Center Tray	Upper Tray Center Tray

*1: Custom paper size range: Width 100 - 297.0 mm (3.94 -11.69 inch) Length 148 -431.8mm (5.83 - 17.00 inch)

3. Scanner mode

A. Scanner function

(1) Mode

Mode	Sub Mode	
Scanner	E-mail	Yes (MX-NB12 is expanded)
	FTP Server	
	Network Folder (SMB)	No
	Desktop	Yes (MX-NB12 is expanded)
	USB Memory	
Twain Scan (Including Button Manager)	–	Yes

(2) Support Image (MX-NB12 is expanded)

Mode	Mode	Type	Support
Scanner (MX-NB12 is expanded)	File Format (B/W)	TIFF	Yes
		PDF	Yes
		PDF/A	N/A
		Encrypted PDF	N/A
		XPS	N/A
	File Format (Gray Scale)	TIFF	Yes
		JPEG	Yes
		PDF	Yes
		PDF/A	N/A
		Encrypted PDF	N/A
		Compact PDF (ACRE installed)	N/A
		XPS	N/A
	File Format (Color)	TIFF	Yes
		JPEG	Yes
		PDF	Yes
		PDF/A	N/A
		Encrypted PDF	N/A
		Compact PDF (ACRE installed)	N/A
		XPS	N/A

(3) Image Processing

Mode		Scanner (MX-NB12 is expanded)
Exposure Adjustment	Auto	Yes
	Manual	5 levels
Original Type *1	Text	Yes
	Photo	Yes
	Auto	Yes
Resolution (Different depending on file format/ sending method)		75 x 75 dpi
		100x100dpi
		150x150dpi
		200x200dpi
		300x300dpi
		400x400dpi
		600x600dpi

*1: This setting can only be set at the B/W mode

(4) Push Scan (Button Manager)

Support OS	Windows 2000 Professional/Windows XP Home Edition/ Windows XP Professional/Windows Vista/Windows 7	
Hardware Environment	(System)	Shall meet the operating conditions of each OS basically.
	(HDD)	8MB or more: 100MB or more is recommended
	(Monitor)	800x600 dots or more Shall be able to display 256 colors or more.
	(Other)	USB port (2.0)
Selectable destination	Sharpdesk/ E-mail software/ Fax software/ OCR software/ MS Word/ Any directory	
File Format	TIFF/PDF/BMP	

(5) Pull Scan (TWAIN)

	USB TWAIN (Does not function in Network system)
Support OS	Windows 2000 Professional/Windows XP Home Edition/ Windows XP Professional/ Windows Vista/Windows 7
Interface	USB
Hardware Environment	(System) Shall meet the operating conditions of each OS basically. (HDD) 8MB or more: 100MB or more is recommended (Monitor) 800x600dots or more Shall be able to display 256 colors or more. (Other) USB port
Two-sided Scan	Yes
Color Mode	B/W(Mono2)/ B/W(Error Diffusion)/Gray Scale/Full Color
Resolution	75dpi/ 100dpi/ 150dpi/ 200dpi/ 300dpi/ 400dpi/ 600dpi Or Custom: 50 - 9600dpi (simulated)
Scanning Range	A3/ A4/ A4-R/ A5/ A5-R/ B4/ B5/ B5-R/ Ledger/ Letter/ Letter-R/ Executive/ Executive-R/ Foolscap/ Invoice/ Invoice-R/ Legal/ 8.5x13.4/ 8.5x13.5(343x216mm)/ Postcard/ 8K/ 16K/ 16K-R/ Auto/ User Definition
Preview Function	Yes
Zoom Preview Function	Yes
Rotation Scan	Yes (90 / 180/ 270 degrees)
Quick Scan	No
Brightness/Contrast Adjustment	Auto/ Manual(-100 - +100)
Gamma Adjustment	Yes
Color Matching	None/ Printer/ CRT/ LCD display/ ICM
Edge Emphasis	None/ Normal/ High/ Fuzzy
B/W Reverse	Yes
Selection of Light Source Color	Yes (Red/ Green/ Blue/ White)
Threshold Setting	Auto/ Manual (1-254)
Addition of Void Area	Available (Lead Edge/Trail Edge: 2.5mm Right/Left: 3.0mm)
Storing of Setting Contents	Yes
Keeping of Preview Image	Yes
Unit of Display for Scanning Range	Pixel/ mm/ inch
Notes' Security Feature	No

(6) Network Push Scan (MX-NB12 is expanded)

a. Specification

Support OS	Windows 2000 Professional/Windows XP Home Edition/ Windows XP Professional/Windows Vista/Windows 7
Scan Resolution	75x75, 100x100, 150x150, 200x200, 300x300, 400x400, 600x600dpi (main direction x sub direction)
Interface	USB 2.0, 10/100BASE-TX
Support Server/Protocol	TCP/IP, SMTP, LDAP, FTP
Output file format	B&W : PDF (w/o compression, G3, G4), TIFF (w/o compression, G3, G4) Color/Gray scale: JPEG, PDF(JPEG), TIFF(JPEG) TIFF/PDF supports multi page.
2-sided original scan	Yes
Optical Resolution	400x600dpi
File creation	File per 1 to 6 page / 1 file for all pages
Sending method/Linkage	File server sending scan Desktop sending scan E-mail sending scan USB memory scan
Density	1 - 5
Light Source	Yes (Red/ Green/ Blue/ White)
Void Area	Yes
Control System	Embedded Web server
Recommended Web browser	Internet Explorer6.0 or later
Support Mail system	Mail server supporting SMTP, Mail server supporting POP3
Addressing	Rapid / Group / Indication by Direct Address Input / Selection from LDAP Server
Number of registration of destination	Max. 200 All destination including E-mail, File server, Desktop and Group. Multiple E-mail addresses can be registered as a group and as 1 destination (max. 100). In this case, number of registration of destination may be less than 200.
Utility	Sharpdesk

b. Scanner Setting

Key	Grouping	Selectable items	Remark
Color Mode	Color Mode	*Color Gray Monochrome	Set the scan color *Default is Color.
Format	Format and Compression method	TIFF TIFF G3 TIFF G4 *PDF PDF G3 PDF G4 JPEG	Specify file format. *Default is PDF
	Multi-file/Single file	Single : 1 page / file *Multi : All pages / file Multi : 2 pages / file Multi : 3 pages / file Multi : 4 pages / file Multi : 5 pages / file Multi : 6 pages / file	Specify Single or Multi. Single: 1 page / file Multi: Plural pages / file *Default: All pages / file
Resolution	Resolution	75dpi 100dpi *150dpi 200dpi 300dpi 400dpi 600dpi	Set the output resolution *Default: 150dpi
Duplex	1-side / 2-sided original	*1-side 2-sided	Set the original type whether 1-side or 2-sided. This menu will appear when RSPF is installed. If 2-sided is specified, original is scanned only by RSPF. *Default: 1-side
	Vertical original (set vertical) Horizontal original (set vertical) Vertical original (set horizontal) Horizontal original (set horizontal)	Vertical original (set vertical) Horizontal original (set vertical) Vertical original (set horizontal) Horizontal original (set horizontal)	
Original size	Scan size	A3/B4/A4/A4R/B5/B5R/A5/A5	Set the scan size.

[4] CONSUMABLE PARTS

1.Supply system table

A. North America, Middle America, South America

No.	Name	Product name	Content	Life	Remark
1	Toner cartridge(Black)	MX-235NT	Toner cartridge x1 Vinyl bag x1	16K Default is Toner save mode. Life is 19K. (200V series)	Life setting by A4 6% document
2	Developer	MX-235NV	Developer x1	50K	
3	Drum KIT	AR-205DR	Drum x1 Drum fixing plate x1	50K	

B. Brazil

No.	Name	Product name	Content	Life	Remark
1	Toner cartridge(Black)	MX-235BT	Toner cartridge x1 Vinyl bag x1	16K	Life setting by A4 6% document
2	Developer	MX-235NV	Developer x1	50K	
3	Drum KIT	AR-205DR	Drum x1 Drum fixing plate x1	50K	

C. Europe

No.	Name	Product name	Content	Life	Remark
1	Toner cartridge(Black)	MX-235GT	Toner cartridge x1 Vinyl bag x1	16K	Life setting by A4 6% document
2	Developer	MX-235GV	Developer x1	50K	
3	Drum KIT	AR-205DM	Drum x1 Drum fixing plate x1	50K	

D. Australia/New Zealand

No.	Name	Product name	Content	Life	Remarke
1	Toner cartridge(Black)	MX-235GT	Toner cartridge x1 Vinyl bag x1	16K	Life setting by A4 6% document
2	Developer	MX-235GV	Developer x1	50K	
3	Drum KIT	AR-205DM	Drum x1 Drum fixing plate x1	50K	

E. Middle East, Africa (except Iran) /Israel/Philippines/Others

No.	Name	Product name	Content	Life	Remark
1	Toner cartridge(Black)	MX-235FT	Toner cartridge x1 Vinyl bag x1	16K	Life setting by A4 6% document
2	Toner cartridge(Black)	MX-236FT	Toner cartridge x1 Vinyl bag x1	8.4K	Life setting by A4 6% document
3	Developer	MX-235FV	Developer x1	50K	
4	Drum KIT	AR-205DR	Drum x1 Drum fixing plate x1	50K	

F. Taiwan

No.	Name	Product name	Content	Life	Remark
1	Toner cartridge(Black)	MX-235FT	Toner cartridge x1 Vinyl bag x1	16K	Life setting by A4 6% document
2	Toner cartridge(Black)	MX-236FT	Toner cartridge x1 Vinyl bag x1	8.4K	Life setting by A4 6% document
3	Developer	MX-235FV	Developer x1	50K	
4	Drum KIT	AR-205DR	Drum x1 Drum fixing plate x1	50K	

G. Asia(Except the above)/Thailand/Hong Kong

No.	Name	Product name	Content	Life	Remark
1	Toner cartridge(Black)	MX-235AT	Toner cartridge x1 Vinyl bag x1	16K	Life setting by A4 6% document
2	Toner cartridge(Black)	MX-236AT	Toner cartridge x1 Vinyl bag x1	8.4K	Life setting by A4 6% document
3	Developer	MX-235AV	Developer x1	50K	
4	Drum KIT	AR-205DR	Drum x1 Drum fixing plate x1	50K	

2. Environmental conditions

A. Transport conditions

(1) Transport conditions

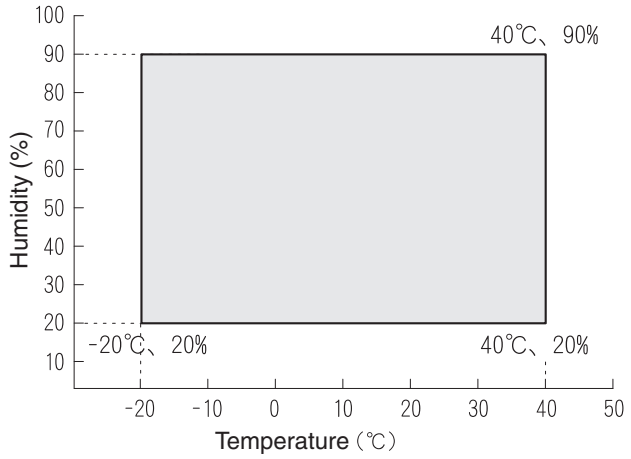

(2) Storage conditions

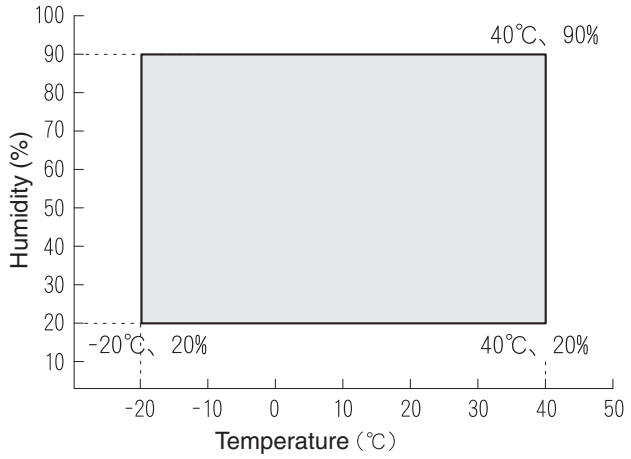

B. Use conditions

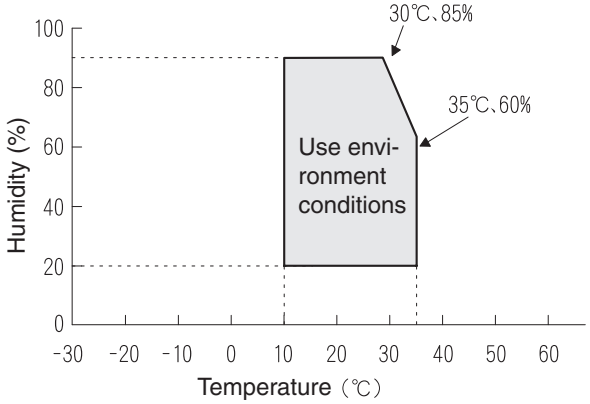

C. Life(packed conditions)

Photoconductor drum (36 months from the production month)
Developer, toner (24 months from the production month)

3. Production number identification

<Toner cartridge>

The label on the toner cartridge shows the date of production.

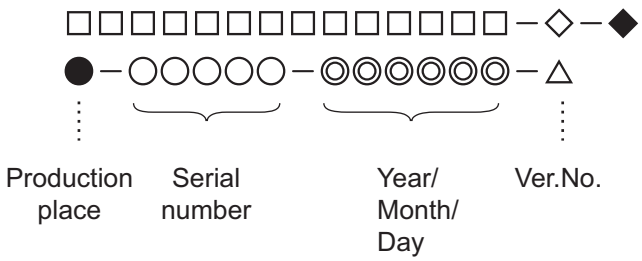

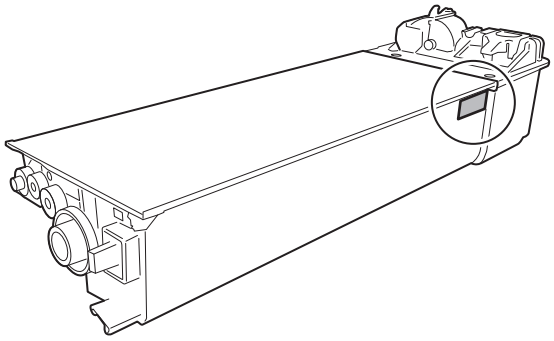

<Drum cartridge>

The lot number, printed on the front side flange, is composed of 10 digits, each digit showing the following content:

1	2	3	4	5	6	7	8	9	10

The lot number is of 10 digits. Each digit indicates the content as follows. The number is printed on the flange on the front side.

1: Number
For this model, this digit is 2.

2: Alphabet
Indicates the model conformity code. G for this model.

3: Number
Indicates the end digit of the production year.

4: Number or X, Y, Z
Indicates the production month.
X stands for October, Y November, and Z December.

5/6: Number
Indicates the day of the production date.

7: Number
Indicates the day of the month of packing.
X stands for October, Y November, and Z December.

8/9: Number
Indicates the day of the packing date.

10: Alphabet
Indicates the production factory.

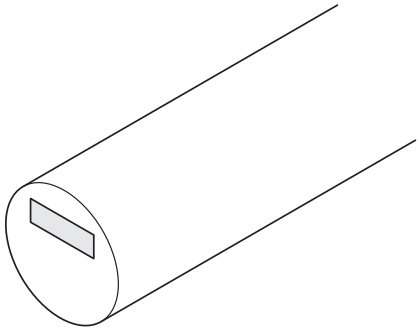

[5] EXTERNAL VIEWS AND INTERNAL STRUCTURES

1. Appearance

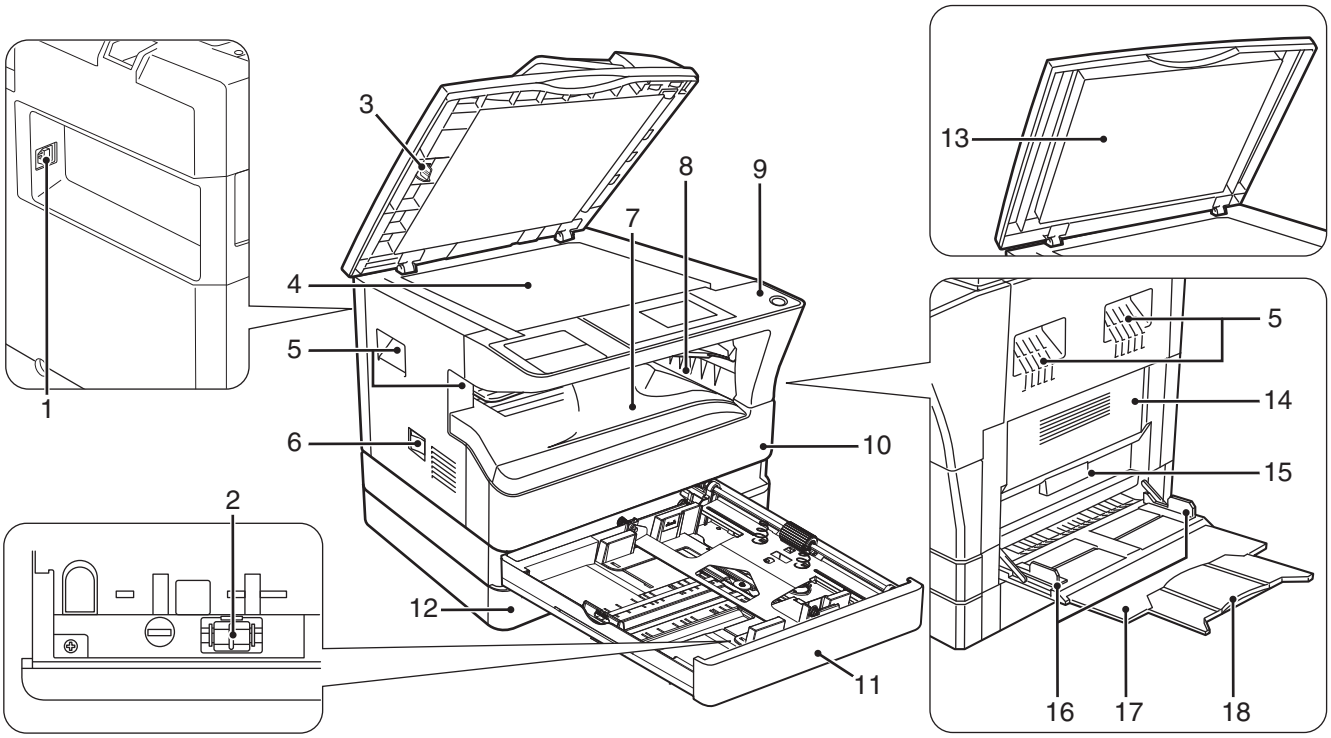

1	USB 2.0 port	Connect to your computer to this port to use the printer and scanner functions.
2	Charger cleaner	Use to clean the transfer charger.
3	Glass cleaner	Use to clean the original scanning glass.
4	Document glass	Place an original that you wish to scan face down here.
5	Handles	Use to move the machine.
6	Power switch	Press to turn the machine power on and off.
7	Centre tray	Copies and printed pages are output to this tray.
8	Top tray (when the job separator tray kit is installed)	Received faxes (when the fax option is installed) and print jobs are delivered to this tray.
9	Operation panel	Contains operation keys and indicator lights.
10	Front cover	Open to remove paper misfeeds or replace the toner cartridge.
11	Tray 1	Tray 1 can hold approximately 250 sheets of copy paper (80 g/m2 (20 lbs.)).
12	Tray 2	Tray 2 can hold approximately 250 sheets of copy paper (80 g/m2 (20 lbs.)).
13	Document cover (when installed)	Open to make a copy from the document glass.
14	Side cover	Open to remove misfeed paper.
15	Side cover handle	Pull to open the side cover.
16	Bypass tray guides	Adjust to the width of the paper when using the bypass tray.
17	Bypass tray	Special paper (heavy paper or transparency film) can be fed from the bypass tray.
18	Bypass tray extension	Pull out when feeding large paper such as A3 and B4 (11" x 17" and 8-1/2" x 14").

2. Internal

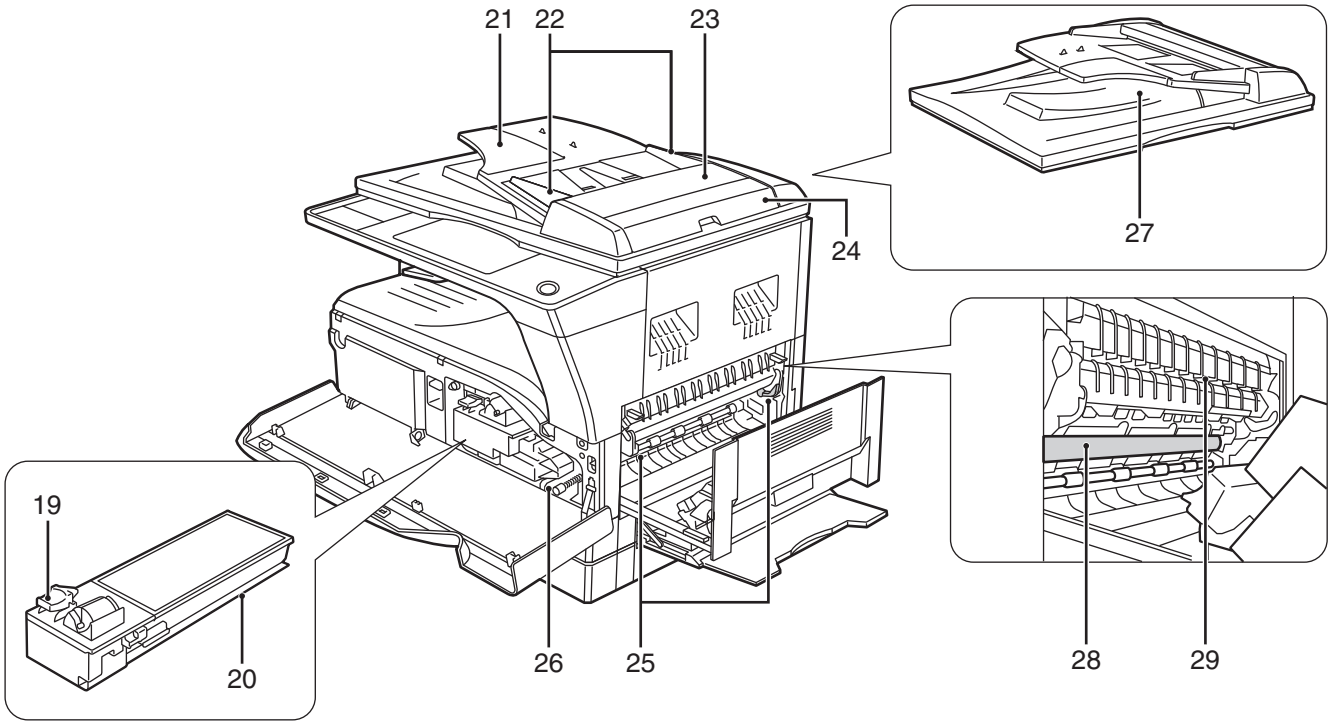

19	Toner cartridge lock release lever	To replace the toner cartridge, pull out the toner cartridge while pushing on this lever.
20	Toner cartridge	Contains toner.
21	Document feeder tray (when the SPF/RSPF is installed)	Place the original(s) that you wish to scan face up here. Up to 40 sheets can be placed.
22	Original guides (when the SPF/RSPF is installed)	Adjust to the size of the originals.
23	Feeding roller cover (when the SPF/RSPF is installed)	Open to remove misfeed originals.
24	Right side cover (when the SPF/RSPF is installed)	Open to remove misfeed originals.
25	Fusing unit release levers	To remove the paper misfeed in the fusing unit, push down on these levers and remove the paper.
26	Roller rotating knob	Rotate to remove misfeed paper.
27	Exit area (when the SPF/RSPF is installed)	Originals exit the machine here after copying/scanning when the SPF/RSPF is used.
28	Photoconductive drum	Images are formed on the photoconductive drum.
29	Fusing unit paper guide	Open to remove misfeed paper.

Warning: The fusing unit is hot. Do not touch the fusing unit when removing misfeed paper. Doing so may cause a burn or injury.
Do not touch the photoconductive drum (green portion) when removing the misfeed paper. Doing so may damage the drum and cause smudges on copies.

Note: The model name is on the front cover of the machine.

3. Operation Section

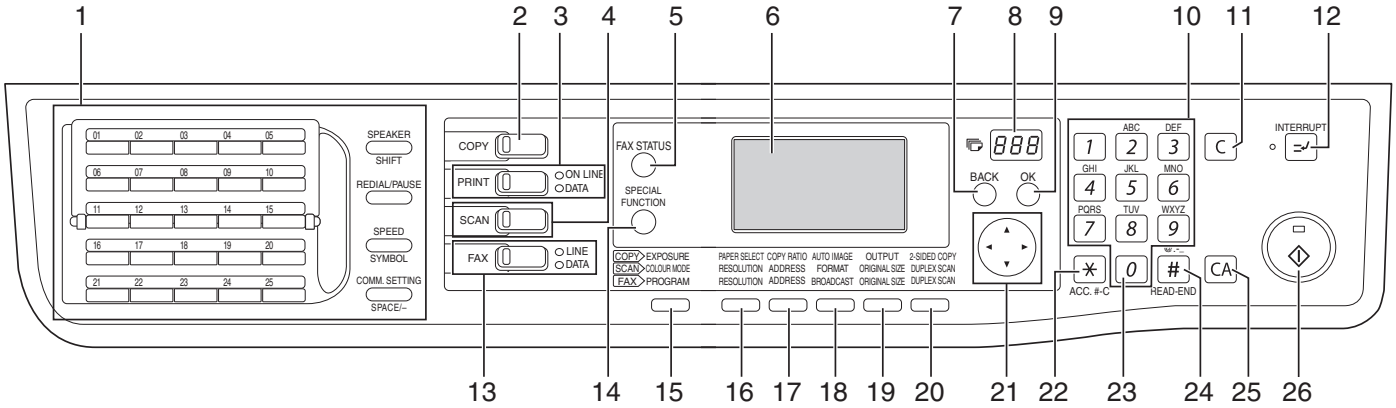

1	Keys for fax function (when the fax option is installed)	These are used in fax mode.
2	[COPY] key / indicator	Press to select copy mode. If pressed when "Ready to copy." appears or during warm-up, the total number of sheets used appears while the key is pressed.
3	[PRINT] key / indicator **• ONLINE indicator** **• DATA indicator**	Press to select print mode. Print jobs can be received when this indicator is lit. This lights steadily when there is a print job in memory that has not been printed, and blinks during printing.
4	[SCAN] key / indicator	Press to select scan mode. To use the machine as a network scanner, see the "Operation Guide (NETWORK EXPANSION KIT)" that accompanies the machine.
5	[FAX STATUS] key (when the fax option is installed)	This key is used in fax mode.
6	Display	Shows various messages.
7	[BACK] key	Press to return the display to the previous screen.
8	Copy number display	The selected number of copies appears. During copying, this shows the remaining number of copies.
9	[OK] key	Press to enter the selected setting.
10	Numeric keys	Use to select the number of copies.
11	[C] key	Press to clear the set number of copies or stop a copy run.
12	[INTERRUPT] key ( ) / INTERRUPT indicator	Interrupts a copy run to allow an interrupt copy job to be performed.
13	[FAX] key / indicator (when the fax option is installed) LINE indicator, DATA indicator	This key is used in fax mode.
14	[SPECIAL FUNCTION] key	Press to select special functions.
15	[EXPOSURE] key	Use to select the exposure mode. "AUTO", "TEXT", or "PHOTO" can be selected.
16	[PAPER SELECT] key	Use to manually select a paper tray.
17	[COPY RATIO] key	Press to select a reduction or enlargement copy ratio.
18	[AUTO IMAGE] key	Press to have the copy ratio selected automatically.
19	[OUTPUT] key	Use to select the sort function.
20	[2-SIDED COPY] key (MX-M182D/MX-M202D/MX-M232D)	Select the two-sided copying mode.
21	Arrow keys	Press to move the highlighting (which indicates that an item is selected) in the display.
22	[ACC.#-C] key ( )	Press the end the use of an account and return the display to the account number entry screen.
23	[0] key	Press during a continuous copy run to display the number of copies completed.
24	[READ-END] key ( )	When copying in sort mode from the document glass, press this key when you have finished scanning the original pages and are ready to start copying.
25	[CA] key	Clears all selected settings and returns the machine to the default settings.
26	[START] key ( ) / indicator	Copying is possible when this indicator is on. Press the key to start copying. This indicator blinks when auto power shut-off mode has activated. Press the key to return to normal operation.

4. Motor, solenoid, clutch

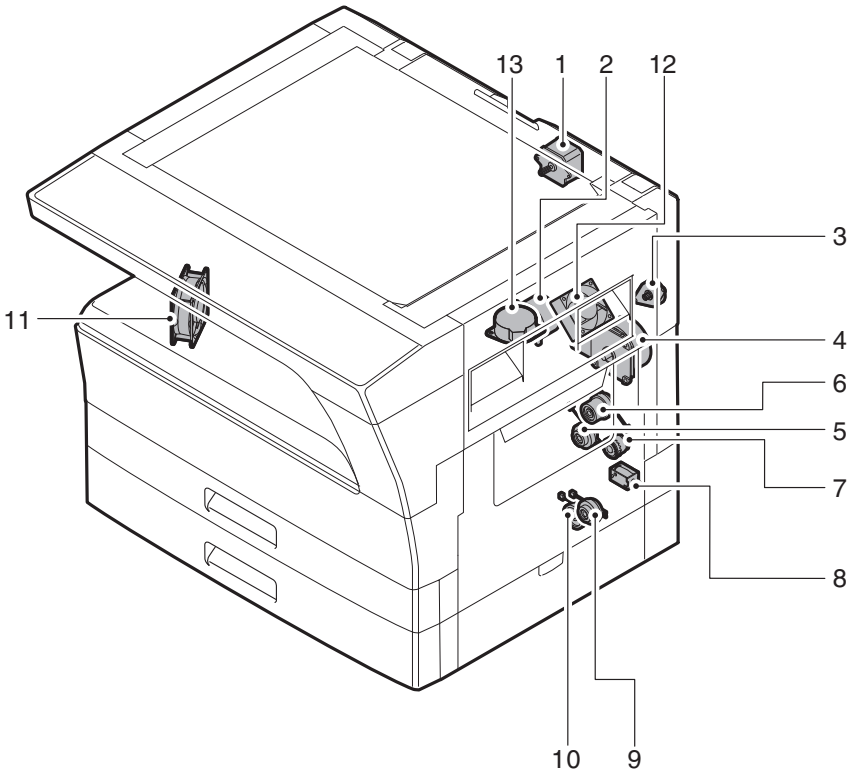

No.	Name	Code	Function operation
1	Mirror motor	MRM	Drives the optical mirror base (scanner unit).
2	Toner motor	TM	Toner supply
3	Duplex motor	DPX	Switchback operation and paper exit motor in duplex. (MX-M182D/M202D/M232D)
4	Main motor	MM	Drives the machine.
5	1st tray paper feed clutch	CPSCL1	Drives the pick up roller
6	PS clutch	RRC	Drives the resist roller
7	Bypass tray paper transport clutch	MPTC	Drives the bypass tray paper transport roller.
8	Bypass tray paper feed solenoid	MPFS	Bypass tray paper feed solenoid
9	2nd tray transport clutch	FSCL1	Drives the 2nd tray transport roller. (MX-M202D/M232D)
10	2nd tray paper feed clutch	PSCL2	Drives the 2nd tray paper feed roller. (MX-M202D/M232D)
11	Exhaust fan motor	PSFM	Cools the inside of the machine.
12	Cooling fan motor	VFM	Cools the inside of the machine.
13	Shifter motor	SFTM	Drives the shifter motor.

5. Sensor, switch

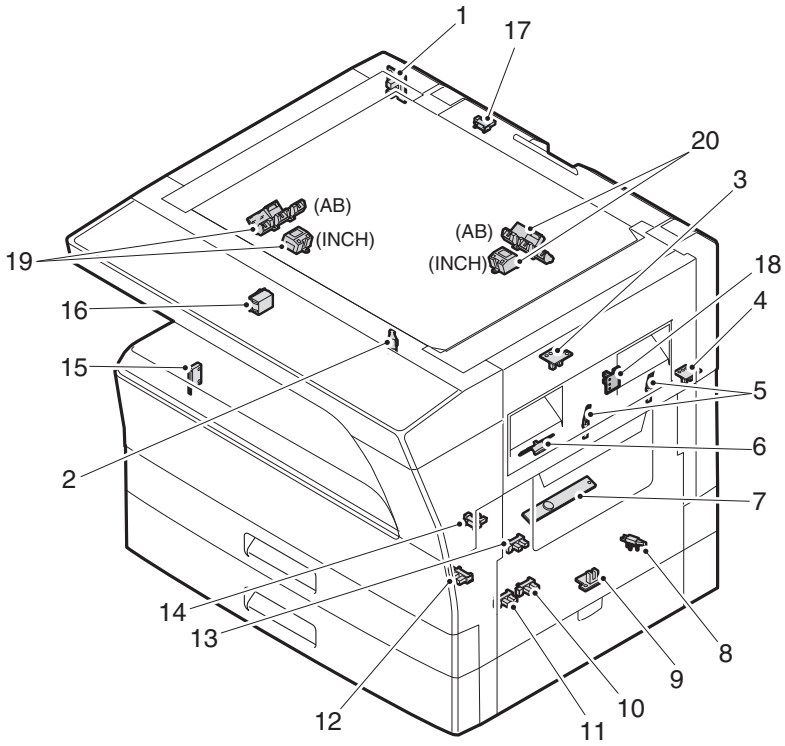

No.	Name	Code	Function operation
1	Mirror home position sensor	MHPS	Detects the mirror (scanner unit) home position.
2	Side door switch	DSWR	Side door open detection
3	Paper exit sensor (paper exit side)	POD1	Detects paper exit.
4	Paper exit sensor (DUP side)	PDPX	Paper transport detection
5	Thermistor	RTH	Fusing section temperature detection
6	Thermostat	RDTCT	Fusing section abnormally high temperature detection
7	Toner density sensor	TCS	Detects the toner density in the developing unit.
8	2nd tray detection switch	CSD2	2nd tray detection
9	Bypass tray sensor	MPED	Bypass tray transport detection
10	2nd tray door open/close sensor	DRS2	2nd tray door open/close detection (MX-M202D/M232D)
11	2nd tray door paper pass sensor	PPD2	2nd tray paper entry detection (MX-M202D/M232D)
12	2nd tray paper empty sensor	CSS2	2nd tray paper empty detection (MX-M202D/M232D)
13	Paper in sensor	PIN	Paper transport detection
14	Tray empty	CSS1	Tray paper entry detection
15	Front cover SW	DSWF	Front cover open detection
16	Power switch	MAIN SW	Turns ON/OFF the main power source.
17	OC sensor	OCSW	Original cover and SPF open/close detection
18	Shifter home position sensor	SFTHP	Shifter home position detection
19	Original size sensor(Main Scaning)	DSIN0	Original size detection
20	Original size sensor(Sub Scaning)	DSIN1	Original size detection

6. PWB unit

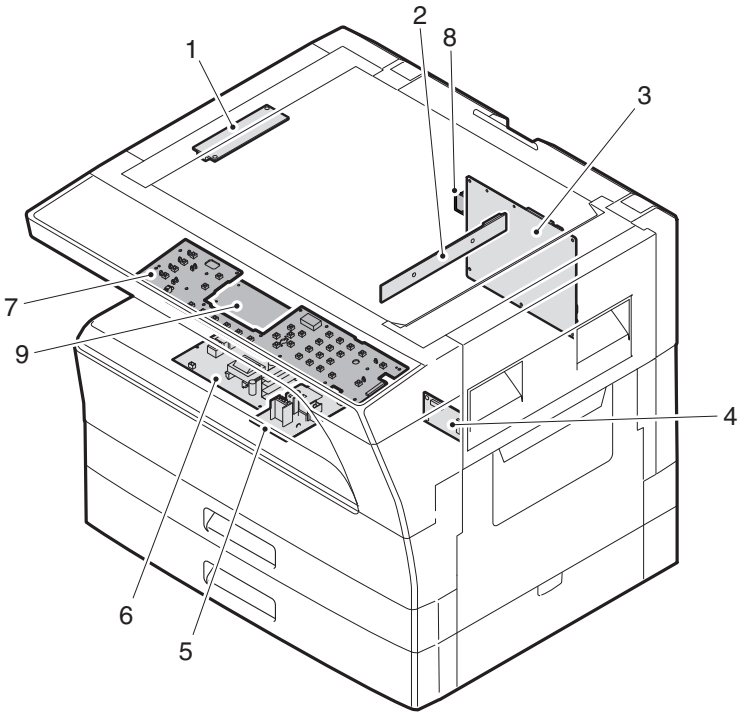

No.	Name	Function operation
1	Copy lamp Inverter PWB	Copy lamp control
2	CCD sensor PWB	Image scanning
3	Main control PWB	Main control PWB
4	2nd tray PWB	2nd tray control
5	High voltage PWB	High voltage control
6	Power PWB	AC power input/DC power control
7	Operation main PWB	Operation panel input/Display, operation panel section control
8	USB I/F PWB	Connect a USB device
9	LCD OPE PWB	Display and operation panel control

7. Cross sectional view

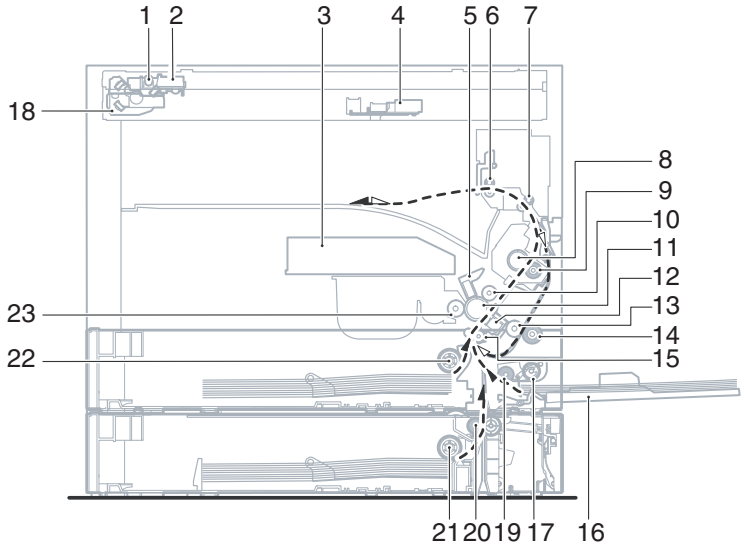

No.	Name	Function/Operation
1	Copy lamp	Image radiation lamp
2	Copy lamp unit	Operates in synchronization with No. 2/3 mirror unit to radiate documents sequentially.
3	LSU unit	Converts image signals into laser beams to write on the drum.
4	Lens unit	Reads images with the lens and the CCD.
5	MC holder unit	Supplies negative charges evenly on the drum.
6	Paper exit roller	Used to discharge paper.
7	Transport roller	Used to transport paper.
8	Upper heat roller	Fuses toner on paper (with the teflon roller).
9	Lower heat roller	Fuses toner on paper (with the silicon rubber roller).
10	Waste toner transport roller	Transports waste toner to the waste toner box.
11	Drum unit	Forms images.
12	Transfer charger unit	Transfer images (on the drum) onto paper.
13	DUP follower roller	Transports paper for duplex.
14	Duplex transport roller	Transports paper for duplex .
15	Resist roller	Takes synchronization between the paper lead edge and the image lead edge.
16	Bypass tray	Bypass tray
17	Bypass tray paper pick up roller	Picks up paper in bypass tray.
18	No. 2/3 mirror unit	Reflects the images from the copy lamp unit to the lens unit.
19	Bypass tray transport roller	Transports paper from the bypass tray.
20	2nd tray paper transport roller	Transports paper from the 2nd tray. (MX-M202D/M232D)
21	2nd tray paper pick up roller	Picks up paper from the 2nd tray. (MX-M202D/M232D)
22	1st tray paper feed roller	Picks up paper from the 1st tray.
23	MG roller	Puts toner on the OPC drum.

[6] ADJUSTMENTS

1. Adjustment item list

Section			Adjustment item	Adjustment procedure/SIM No.
A	Process section	(1)	Developing doctor gap adjustment	Developing doctor gap adjustment
		(2)	MG roller main pole position adjustment	MG roller main pole position adjustment
		(3)	Developing bias voltage check	
		(4)	Main charger voltage check	
B	Mechanism section	(1)	Image position adjustment	SIM-50
		(2)	Main scanning direction (FR direction) distortion balance adjustment	No. 2/3 mirror base unit installing position adjustment
				Copy lamp unit installing position adjustment
		(3)	Main scanning direction (FR direction) distortion adjustment	Rail height adjustment
		(4)	Sub scanning direction (scanning direction) distortion adjustment	Winding pulley position adjustment
		(5)	Main scanning direction (FR direction) magnification ratio adjustment	SIM 48-1
		(6)	Sub scanning direction (scanning direction) magnification ratio adjustment	OC mode in copying (SIM 48-1)
				SPF mode in copying (SIM 48-5)
		(7)	Off center adjustment	OC mode (SIM 50-12)
				SPF mode (SIM 50-12)
C	Image density adjustment	(1)	Copy mode	SIM 46-2

2. Copier adjustment

A. Process section

(1) Developing doctor gap adjustment

1) Loosen the developing doctor fixing screw A.
2) Insert a thickness gauge of 1.5mm to the three positions at 20mm and 150mm from the both ends of the developing doctor as shown.

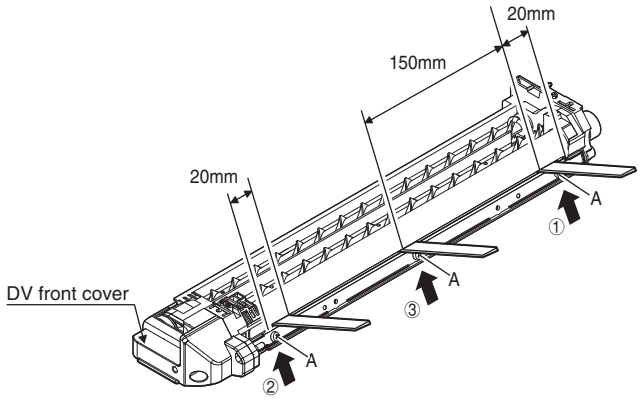

3) Push the developing doctor in the arrow direction, and tighten the fixing screws of the developing doctor in the sequence of ①→②→③.
4) Check the clearance of the developing doctor. If it is within the specified range, then fix the doctor fixing screw with screw lock.

* When inserting a thickness gauge, be careful not to scratch the developing doctor and the MG roller.

<Adjustment specification>

Developing doctor gap

Both ends (20mm from the both ends) : 1.5±0.1mm

C (Center) (150mm from the both ends) : 1.5±0.1mm

(2) MG roller main pole position adjustment

1) Remove the DV front cover, and put the developing tank on a flat surface.
2) Tie a string to a needle or a pin.
3) Hold the string and bring the needle close to the MG roller horizontally. (Do not use paper clip, which is too heavy to make a correct adjustment.) (Put the developing unit horizontally for this adjustment.)
4) Do not bring the needle into contact with the MG roller, but bring it to a position 2 or 3mm apart from the MG roller. Mark the point on the MG roller which is on the extension line from the needle tip.
5) Measure the distance from the marking position to the top of the doctor plate of the developing unit to insure that it is 18mm.
   If the distance is not within the specified range, loosen the fixing screw A of the main pole adjustment plate, and move the adjustment plate in the arrow direction to adjust.

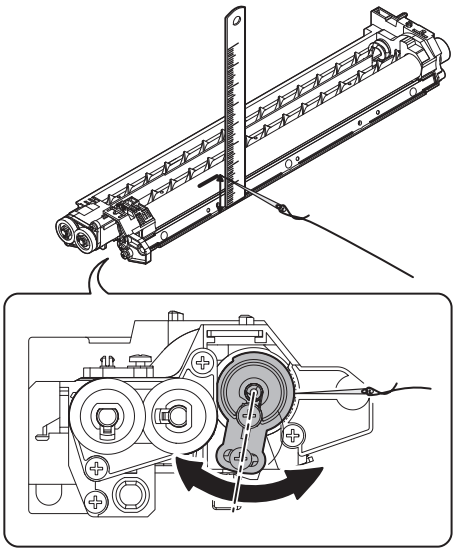

(3) Developing bias voltage check

Note: Use a digital multi-meter with an internal resistance of 10MΩ or more.

1) Set the digital multi-meter range above 500 Vdc.
2) Put the test rod of the digital multi-meter on the developing bias voltage output check pin.
3) Turn on the power, execute SIM25-1.

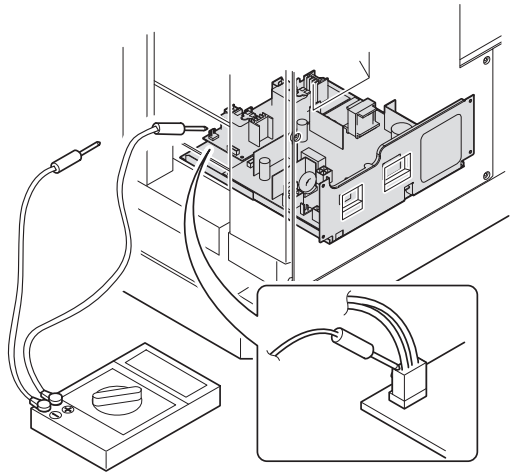

<Specification>

Mode	Specification
Developing bias voltage	DC - 400±10V

(4) Grid bias voltage check

Note: Use a digital multi-meter with an internal resistance of 10MΩ or more.

1) Set the digital multi-meter range above 600 Vdc.
2) Put the test rod of the digital multi-meter on the grid bias voltage output check pin.
3) Turn on the power.
   (The voltage is outputted in the grid bias High output mode during warming up, and in the grid bias Low output mode when warming up is completed.)

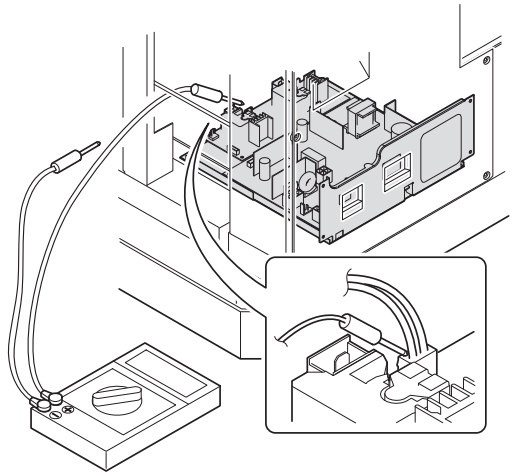

<Specification>

Mode	Specification
Grid bias LOW	DC - 380±8V
Grid bias HIGH	DC - 525±10V

B. Mechanism section

(1) Image position adjustment

a. OC image lead edge position adjustment (SIM 50-1)

Note: In advance to this adjustment, the sub scanning magnification ratio adjustment must be performed.

1) Set a scale on the OC table as shown below.

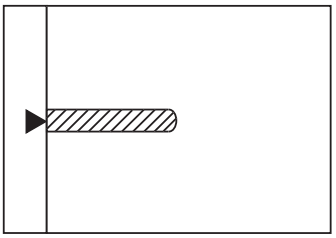

2) Make a copy.
3) Check the copy output. If necessary, perform the following adjustment procedures.
4) Execute SIM 50-01.
   Select a desired mode with the arrow keys, enter the adjustment value with 10-key, and press [OK] key.
   When [START] key is pressed, a sheet is printed.

(Mode selection window 1)

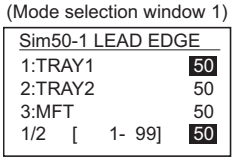

(Mode selection window 2)

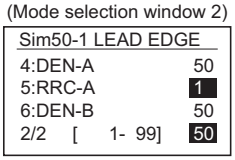

(Copy start window)

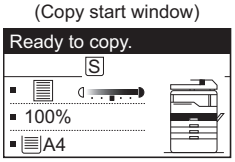

(Copy execution window)

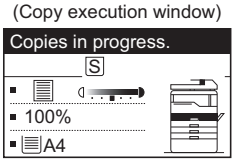

<Adjustment specification>

Adjustment mode	SIM	Display text array	Set value	Spec value	Set range
OC image lead edge position	SIM 50-1	RRC-A	R/0.1	Lead edge void: 1 - 4mm Image loss: 3mm or less	1 - 99
Main cassette print start position		TRAY1	H/0.1		
2nd cassette print start position		TRAY2			
Multi bypass tray print start position		MFT			
Lead edge void		DEN-A	B/0.05		

5) Set the OC lead edge position set value (RRC-A) to [1]
   The OC image scanning start position is shifted inside the document edge.
6) Set the main cassette lead edge void adjustment value (DEN-A)* to [1]
   The lead edge void becomes the minimum.

7) Set the main cassette print start position value (TRAY1) to [1] and make a copy.
The print start position is shifted inside the document edge.

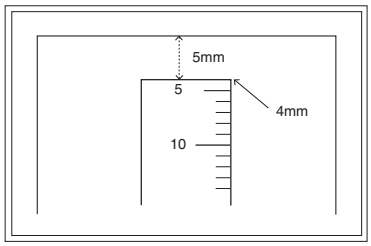

*The dimension varies depending on the model.

8) Measure the image loss R of the copied image. Enter the set value of the image scanning lead edge position (RRC-A) again.

- 1 step of the set value corresponds to about 0.1mm shift.
- Calculate the set value from the formula below.

R/0.1(mm) = Image loss set value
<R: Image loss measurement value (mm)>

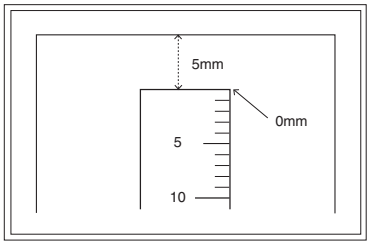

* The scanning edge is set.
(A line may be printed by scanning the document edge.)

Example: 4/0.1 = 40 = about 40
Note: If the set value is not obtained from the above formula, perform the fine adjustment.

9) Measure the distance H between the paper lead edge and the image print start position. Set the image print start position set value (TRAY1) again.

- 1 step of the set value corresponds to about 0.1mm shift.
- Calculate the set value from the formula below.

H/0.1(mm) = Image print start position set value
<H: Print start position measurement value (mm)>

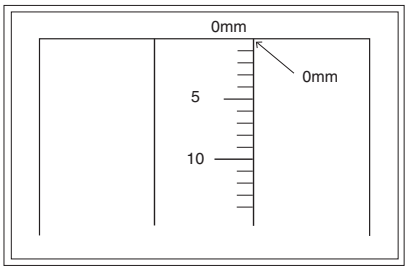

*Fit the print edge with the paper edge, and perform the lead edge adjustment.

Example: 5/0.1 = 50 = about 50
Note: If the set value is not obtained from the above formula, perform the fine adjustment.

10) Set the lead edge void adjustment value (DEN-A)* again.

- 1 step of the set value corresponds to about 0.1mm shift.
- Calculate the set value from the formula below.

B/0.05 (mm) = Lead edge void adjustment value
<B: Lead edge void (mm)>

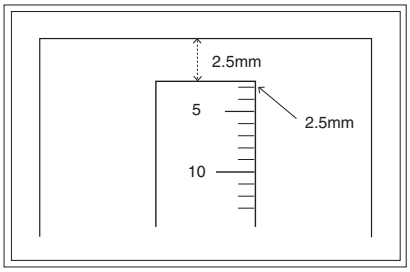

Example: When setting the lead edge void to 2.5mm
:2.5 /0.05 = about 50
Note: If the set value is not obtained from the above formula, perform the fine adjustment.

b. SPF image lead edge position adjustment (SIM50-6)

1) Set a scale on the OC table as shown below.

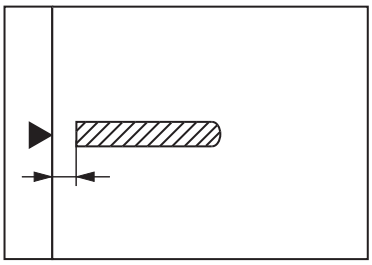

Note: Since the printed copy is used as a test chart, put the scale in parallel with the edge lines.

2) Make a copy, Then use the copy output as an original to make an SPF copy again.
3) Check the copy output. If necessary, perform the following adjustment procedures.
4) Execute SIM 50-6.
5) Set the SPF lead edge position set value (SIDE1) so that the same image is obtained as that obtained in the previous OC image lead edge position adjustment.

(Mode selection window)

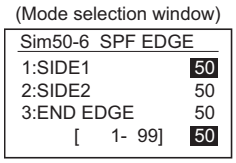

(Copy start window)

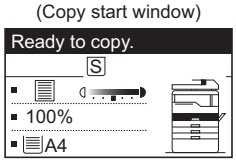

(Copy execution window)

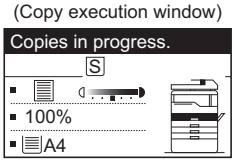

<Adjustment specification>

Adjustment mode	SIM	Display text array	Set value	Spec value	Set range
SPF image lead edge position (1st print surface)	SIM 50-6	SIDE1	1 step: 0.1mm shift	Lead edge void: 1 - 4mm Image loss: 3mm or less	1 - 99

c. Rear edge void adjustment (SIM50-1, SIM50-19)

1) Set a scale as shown in the figure below.

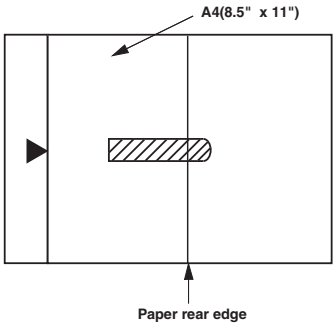

2) Set the document size to A4 (8.5" x 11"), and make a copy at 100%.
3) If necessary, perform the following adjustment procedure.

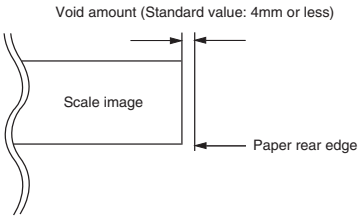

4) Execute SIM50-01 and select "DEN-B" with the arrow keys.
   The currently set adjustment value is displayed.
5) Enter the set value and press the start key. The correction value is stored and a copy is made.

<Adjustment specification>

Mode	SIM	Display text array	Set value	Specifi-cation	Set range
Rear edge void	SIM 50-1	DEN-B	1 step: 0.1mm shift	4mm or less	1 - 99

d. Paper off center adjustment (SIM50-10)

1) Set a test chart (UKOG-0089CSZZ) on the document table.
2) Select a paper feed port and make a copy. Compare the copy and the test chart. If necessary, perform the following adjustment procedure.
3) Execute SIM 50-10. After completion of warm-up, shading is performed and the currently set off center adjustment value of each paper feed port is displayed.

```
Sim50-10 PRT. CENTER
1:TRAY1          50
2:TRAY2          50
3:TRAY3          50
1/2    [    1- 99]  50
```

```
Sim50-10 PRT. CENTER
4:TRAY4          50
5:BYPASS         50
6:DUPLEX         50
2/2    [    1- 99]  50
```

4) Enter the set value and press the start key. The correction value is stored and a copy is made.

<Adjustment specification>

Adjustment mod	SIM	Display text array	Set value	Specifi-cation	Set range
Tray1	SIM 50-10	TRAY1	Add 1: 0.1mm shift to R side. Reduce 1: 0.1mm shift to L side.	Single: Center ±2.0mm	1 - 99
Tray2		TRAY2			
Tray3		TRAY3			
Tray4		TRAY4			
Manual paper feed tray		BYPASS			
Duplex (Second print surface)		DUPLEX			

e. Side edge void area adjustment (SIM26-43)

Note: Before performing this adjustment, be sure to check that the paper off center adjustment (SIM 50-10) is completed.

1) Set a test chart (UKOG-0089CSZZ) on the document table.
2) Select a paper feed port and make a copy. Compare the copy and the test chart. If necessary, perform the following adjustment procedure.
3) Execute SIM 26-43 and set the density mode to SIDE VOID (L), SIDE VOID (R).
   The currently set adjustment value is displayed.

```
Sim26-43 SIDE  VOID
1:SIDE VOID(L)    3
2:SIDE VOID(R)    3

[    0- 10]       3
```

4) Enter the set value and press the start key. The correction value is stored.

<Adjustment specification>

Adjustment mode	SIM	Display text array	Set value	Specifi-cation	Set range
Side void (left)	26-43	SIDE VOID (L)	1 step: 0.5mm shift	0.5 - 4mm	1 - 99
Side void (right)		SIDE VOID (R)			

(2) Main scanning direction (FR direction) distortion balance adjustment

1) Remove the OC glass and the right cabinet.

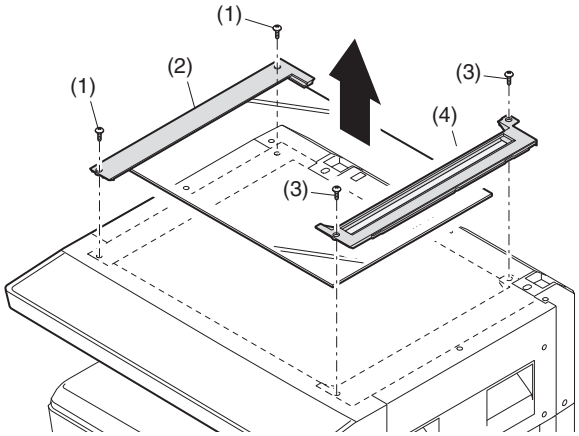

2) Loosen the copy lamp unit wire fixing screw.

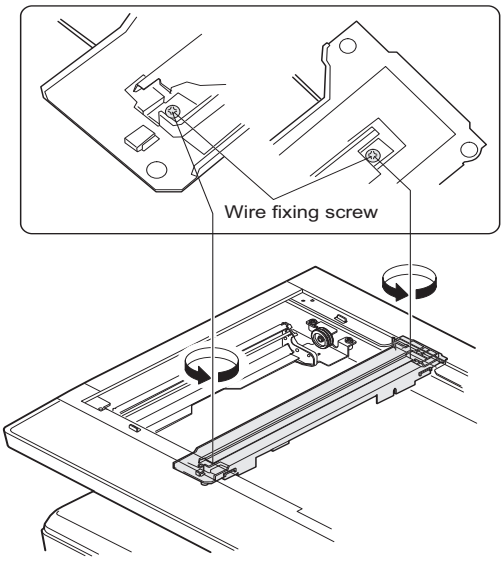

3) Manually turn the mirror base drive pulley and bring No. 2/3 mirror base unit into contact with the positioning plate. At that time, if the front frame side and the rear frame side of No. 2/3 mirror base unit are brought into contact with the positioning plate at the same time, the mirror base unit parallelism is proper. If one of them is in contact with the positioning plate, perform the adjustment of 4).

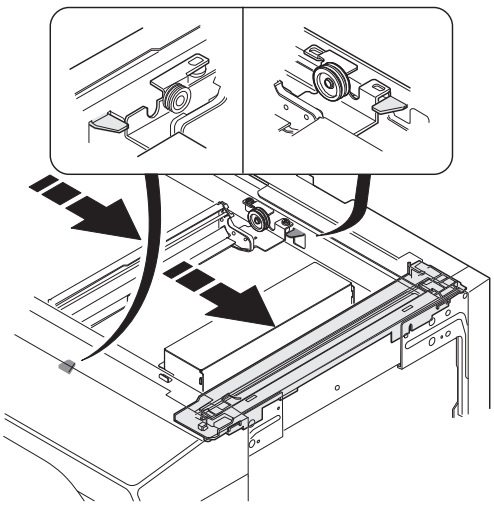

4) Loosen the set screw of the scanner drive pulley which is not in contact with No. 2/3 mirror base unit positioning plate.
5) Without moving the scanner drive pulley shaft, manually turn the scanner drive pulley until the positioning plate is brought into contact with No. 2/3 mirror base unit, then fix the scanner drive pulley.

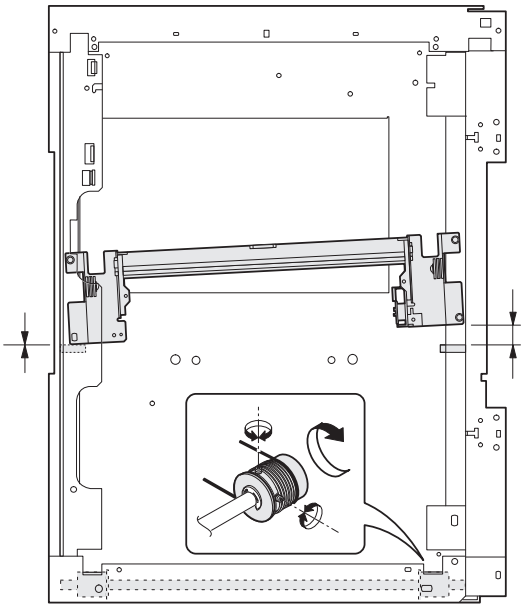

6) Put No. 2/3 mirror base unit on the positioning plate again, push the projections on the front frame side and the rear frame side of the copy lamp unit to the corner frame, and tighten the wire fixing screw.

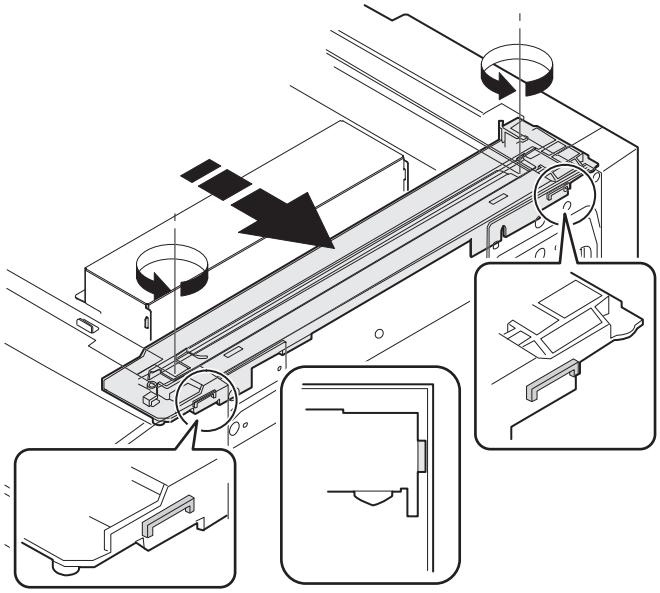

(3) Main scanning direction (FR direction) distortion adjustment

This adjustment must be performed in the following cases:
- When the mirror base drive wire is replaced.
- When the lamp unit, or No. 2/3 mirror holder is replaced.
- When a copy as shown is made.

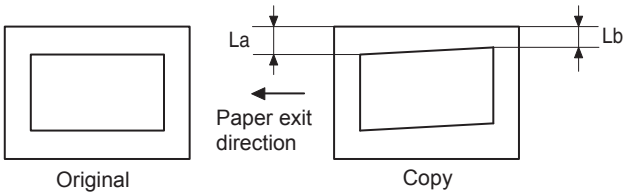

1) Set A3 (11" x 17") white paper on the original table as shown below.

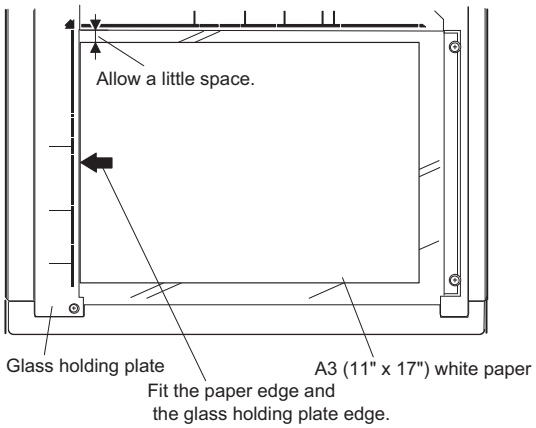

2) Open the original cover and make a normal (100%) copy.
3) Measure the width of the black background at the lead edge and at the rear edge.

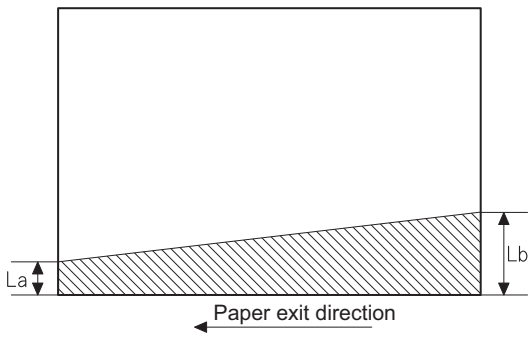

La: Lead edge black background width
Lb: Rear edge black background width

If the width (La) of the black background at the lead edge is equal that (Lb) at the rear edge, there is no need to execute the following procedures of 4) - 7).

4) Loosen the mirror base drive pulley fixing screw on the front frame side or on the rear frame side.

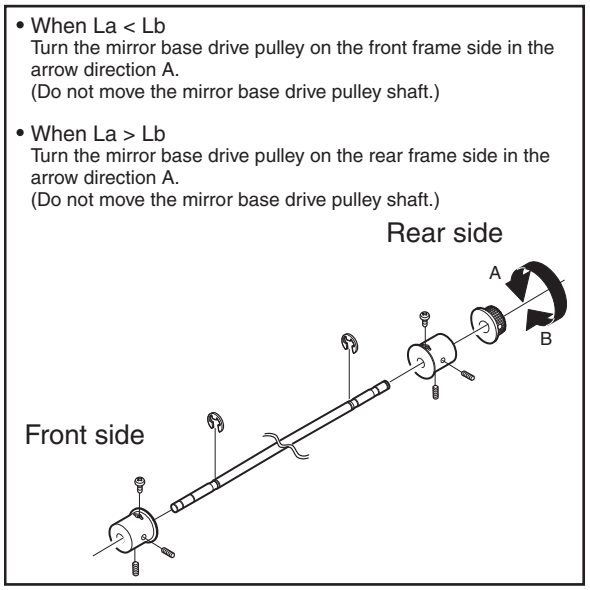

5) Tighten the mirror base drive pulley fixing screw.

<Adjustment specification>

La = Lb

6) Execute the main scanning direction (FR) distortion balance adjustment previously described in 2) again.

(4) Sub scanning direction (scanning direction) distortion adjustment

When there is no skew copy in the mirror base scanning direction and there is no horizontal error (right angle to the scanning direction), the adjustment can be made by adjusting the No. 2/3 mirror base unit rail height.
Before performing this adjustment, be sure to perform the horizontal image distortion adjustment in the laser scanner section.
This adjustment must be performed in the following cases:
- When the mirror base wire is replaced.
- When the copy lamp unit or No. 2/3 mirror unit is replaced.
- When the mirror unit rail is replaced or moved.
- When a following copy is made.

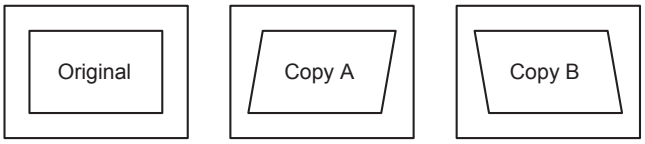

1) Making of a test sheet
Make test sheet by drawing parallel lines at 10mm from the both ends of A3 (11" x 17") white paper as shown below. (These lines must be correctly parallel to each other.)

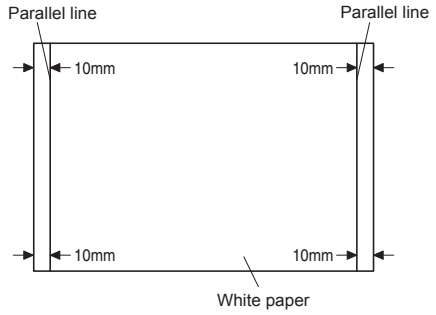

2) Make a normal (100%) copy of the test sheet on A3 (11" x 17") paper. (Fit the paper edge with the glass holding plate edge.)
3) Measure the distances (La, Lb, Lc, Ld) at the four corners as shown below.

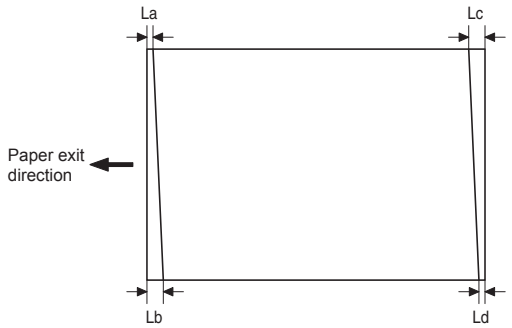

When La = Lb and Lc = Ld, no need to perform the procedures 4) and 5).

4) Move the mirror base F rail position up and down (in the arrow direction) to adjust.

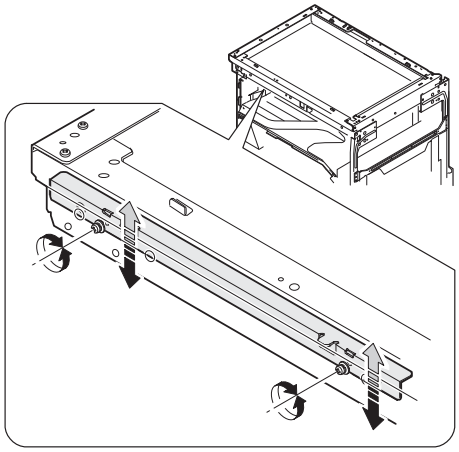

Note: Do not adjust the rail on the rear side.
If the rail on the rear side is adjusted, an error may occur.
Only the rail on the front side can be adjusted.

- When La > Lb
  Shift the mirror base B rail upward by the half of the difference of La - Lb.
- When La < Lb
  Shift the mirror base B rail downward by the half of the difference of Lb - La.
  Example: When La = 12mm and Lb = 9mm, shift the mirror base B rail upward by 1.5mm.
- When Lc > Ld
  Shift the mirror base B rail downward by the half of the difference of Lc - Ld.
- When Lc < Ld
  Shift the mirror base B rail downward by the half of the difference of Ld - Lc.

* When moving the mirror base rail, hold the mirror base rail with your hand.

<Adjustment specification>

La = Lb, Lc = Ld

5) After completion of adjustment, manually turn the mirror base drive pulley, scan the mirror base A and mirror base B fully, and check that the mirror bases are not in contact with each other.
* If the mirror base rail is adjusted to extreme, the mirror base may contact the frame or original glass. Be careful to avoid this.

(5) Main scanning direction (FR direction) magnification ratio adjustment (SIM 48-1)

Note: Before performing this adjustment, be sure to check that the CCD unit is properly installed.

1) Put a scale on the original table as shown below.

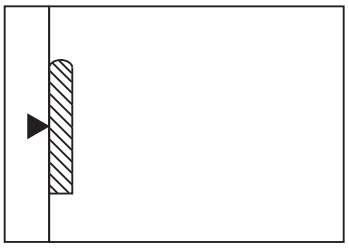

2) Execute SIM 48-1.
3) After completion of warming up, shading is operated and the current correction value of the main scanning direction magnification ratio is displayed on the screen.

Sim48-1 COPY MAG.	
1:F-R	50
2:SCAN	50
[1- 99]	50

4) Enter the set values of the items of F and R, and press [START] key. The correction values are saved and a copy is made.

<Adjustment specification>

Note: A judgment must be made with 200mm width, and must not be made with 100mm width.

Adjustment mode	SIM	Display text array	Set value	Specifi-cations	Set range
Main scanning direction magnifi-cation ratio	48-1	F-R	+1 → +0.1% -1 → 0.1%	Normal ± 1.0%	1 - 99

(6) Sub scanning direction (scanning direction) magnification ratio adjustment (SIM 48-1, SIM 48-5)

a. OC mode in copying (SIM48-1)

Note: Before performing this adjustment, be sure to check that the CCD unit is properly installed.

1) Put a scale on the original table as shown below, and make a normal (100%) copy.

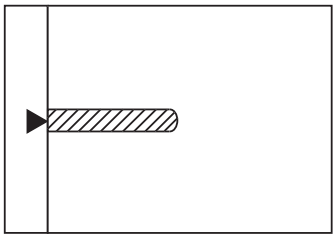

2) Compare the scale image and the actual image. If necessary, perform the following adjustment procedures.
3) Execute SIM 48-1.
4) After completion of warming up, shading is operated and the current correction value of the sub scanning direction magnification ratio is displayed on the screen.

```
Sim48-1 COPY MAG.
1:F-R          50
2:SCAN         50

[    1- 99]    50
```

5) Select [2.SCAN] mode with the cross cursor.

```
Sim48-1 COPY MAG.
1:F-R          50
2:SCAN         50

[    1- 99]    50
```

6) Enter the set value and press the start key.
The set value is stored and a copy is made.

<Adjustment specification>

Adjustment mode	SIM	Display text array	Set value	Specifi-cations	Set range
Sub scanning direction magnification ratio OC mode	48-1	SCAN	+1 → +0.1% -1 → 0.1%	Normal ± 1.0%	1 - 99

b. RSPF sub scanning direction magnification ratio (SIM48-5)

Note:
- Before performing this adjustment, be sure to check that the CCD unit is properly installed.
- Before performing this adjustment, the OC mode adjustment in copying must be completed.

1) Put a scale on the original table as shown below, and make a normal (100%) copy to make a test chart.

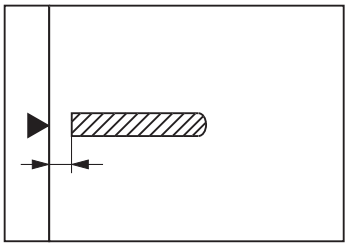

Note: Since the printed copy is used as a test chart, put the scale in parallel with the edge lines.

2) Set the test chart on the SPF and make a normal (100%) copy.
3) Compare the scale image and the actual image. If necessary, perform the following adjustment procedures.
4) Execute SIM 48-5.
5) After warm-up, shading is performed.
6) Check to confirm that the RSPF (SIDE1) mode is selected with the cross cursor.

```
Sim48-5 (R)SPF ZOOM
1:RSPF(SIDE1)      50
2:RSPF(SIDE2)      50

[    1- 99]        50
```

7) Enter the set value and press the start key.
The set value is stored and a copy is made.

<Adjustment specification>

Adjustment mode	SIM	Display text array	Set value	Specifi-cations	Set range
Sub scanning direction magnification ratio (Front surface)	48-5	RSPF (SIDE1)	+1 → +0.1% -1 → 0.1%	Normal ± 1.0%	1 - 99
Sub scanning direction magnification ratio (Back surface)		RSPF (SIDE2)			

* "RSPF (SIDE2)" is displayed only when the RSPF is installed.

(7) Off center adjustment (SIM 50-12)

a. OC mode (SIM50-12)

1) Make a test chart as shown below and set it so that its center line is fit with the original guide center mark.

* To make a test chart, draw a line on A3 or 11" x 17" paper at the center in the paper transport direction.

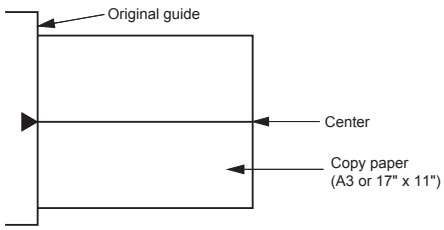

2) Make a normal copy from the manual paper feed tray, and compare the copy and the test chart.
If necessary, perform the following adjustment procedures.
3) Execute SIM 50-12.

4) After completion of warming up, shading is performed and the current off-center adjustment value is displayed on the LCD.

```
Sim50-12 ORG. CENTER
 1:OC                50
 2:SPF(SIDE1)        50
 3:SPF(SIDE2)        50
        [    1- 99]  50
```

5) Enter the set value and press the start key.
The set value is stored and a copy is made.

<Adjustment specification>

Adjustment mode	SIM	Display text array	Set value	Specifi-cations	Set range
Document off-center (OC mode)	50-12	OC	+1 → Shifted to R side by +0.mm. -1 → Shifted to L side by 0.1mm.	Center ± 2.0%	1 - 99

C. Image density adjustment

(1) Copy mode (SIM 46-2)

1) Set a test chart (UKOG-0162FCZZ) on the OC table as shown below.

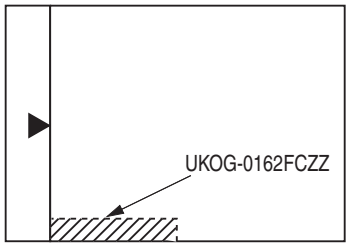

2) Put several sheets of A3 or 11" x 17" white paper on the test chart.
3) Execute SIM 46-2.
4) After completion of warming up, shading is performed, and the current density level is displayed on the LCD.

```
Sim46-1 EXP LEVEL
 1:AE                50
 2:TEXT              50
 3:PHOTO 1           50
 1/2    [    1- 99]  50
```

```
Sim46-1 EXP LEVEL
 4:PHOTO 2           50
 5:TEXT(TS)          50
 6:AE(TS)            50
 2/2    [    1- 99]  50
```

Use the cross cursor to select a mode.
5) Change the set value with the 10-key to adjust the copy image density.
6) Make a copy and check that the specification below is satisfied.

<Adjustment specification>

Density mode	Display text array	Expo-sure level	Sharp Gray Chart output	Set value	Set range
Auto-matic	AE	-	"2" is slightly copied.	The greater the set value is, the darker the density is. The smaller the set value is, the lighter the density is.	1 - 99
Text	TEXT	3	"3" is slightly copied.		
Photo (Error diffu-sion)	PHOTO 1	3	"2" is slightly copied.		
Photo (Dither)	PHOTO 2	3	"2" is slightly copied.		
Toner save (Text)	TEXT (TS)	3	"3" is slightly copied.		
Toner save (Auto-matic)	AE(TS)	-	"2" is slightly copied.		

[7] SIMULATIONS

1. Entering the simulation mode

Perform the following procedure to enter the simulation mode.
[#] key → [⁎] key → [C] key → [⁎] key →
Main code → [START] key → Sub code → [START] key

2. Canceling the simulation mode

When the [CA] key is pressed, the simulation mode is cancelled.
When the interruption key is pressed, the process is interrupted and the screen returns to the sub code entering display.

* After canceling the simulation mode, be sure to turn OFF/ON the power and check the operation.

Note: If the machine is terminated by a jam error or paper empty during copying in the adjustment by the simulation, recopying is required.

Note: The values in the simulation columns are not default values but sample values.

3. List of simulations

Main code	Sub code	Contents
01	01	Mirror scanning operation
	02	Mirror home position sensor (MHPS) status display
02	01	Single paper feeder (SPF)/Reversing single pass feeder(RSPF) aging *2
	02	SPF/RSPF sensor status display *2
	03	SPF/RSPF motor operation check *2
	08	SPF/RSPF paper feed solenoid operation check *2
	09	RSPF reverse solenoid operation check *2 *3
	11	SPF/RSPF PS release solenoid operation check *2
03	02	Shifter/job separator sensor status display
	03	Shifter operation check
	04	Job separator operation check *4
	11	Shifter home position check
05	01	Operation panel display check
	02	Fusing lamp and cooling fan operation check
	03	Copy lamp lighting check
06	01	Paper feed/transport solenoid operation check
	02	Resist roller solenoid (RRS) operation check
07	01	Warm-up display and aging with jam detection
	06	Intermittent aging
	08	Shifting with warm-up display
08	01	Developing bias output
	02	Main charger output (Grid = HIGH)
	03	Main charger output (Grid = LOW)
	06	Transfer charger output
09	01	Duplex motor forward rotation check *6
	02	Duplex motor reverse rotation check *6
	04	Duplex motor RPM adjustment *6
	05	Duplex motor switchback time adjustment
10	-	Toner motor operation
14	-	Trouble cancel (except for U2)
16	-	U2 trouble cancel
20	01	Maintenance counter clear
21	01	Maintenance cycle setting
22	01	Counters display
	03	Jam memory display
	04	Jam total counter display
	07	System setting code display
	09	Paper feed counter display
	11	FAX-related counter display
	13	CRUM destination display *5
	14	P-ROM version display
	15	Trouble memory display
	22	SPF/RSPF jam counter display *2
24	01	Jam total counter clear
	02	Trouble memory clear
	04	SPF/RSPF counter clear *2
	05	Duplex print counter clear *6
	06	Paper feed counter clear
	07	Drum counter clear
	08	Copy counter clear
	09	Printer counter clear
	10	FAX-related counter clear
	13	Scanner counter clear
	14	SPF/RSPF jam total counter clear *2
	15	Scanner mode counter clear
25	01	Main motor operation check (Cooling fan motor rotation check)
	02	Auto developer adjustment (Initial setting of toner density when replacing developer)
	10	Polygon motor operation check
26	01	Job separator setting
	02	Size setting
	03	Auditor setting
	04	Copier duplex setting
	05	Count mode setting
	06	Destination setting
	07	Machine condition check
	08	Manual transfer shaking countermeasures setting
	18	Toner save mode setting
	20	Job separator paper exit mode setting
	22	Language setting clear
	30	CE mark conformity control ON/OFF
	31	Auditor mode exclusive setup
	36	Cancel of stop at maintenance life over
	37	Cancel of stop at developer life over
	39	Memory capacity check
	42	Transfer ON/OFF timing control setting
	43	Side void amount setting
	51	Copy temporary stop function setting
	54	LCD contrast PWM duty setting
	56	Life correction ON/OFF setting
	60	[FAX] key Enable/Disable setting
	69	Toner near end environment setting
	73	Toner save setting display/non-display
	74	Total counter display change setting
30	01	Paper sensor status display
41	01	Document size detection photo sensor check
	02	Document size detection photo sensor detection level adjustment
	03	Document size detection photo sensor light receiving/ detection level check
	04	Detection level adjustment when the document size is settled(15degrees - 20degrees)
42	01	Developing counter clear

Main code	Sub code	Contents
43	01	Fusing temperature setting 1
	02	Fusing temperature setting 2
	03	Fusing temperature setting 3
	04	Fusing temperature setting 4
	12	Standby mode fusing fan rotation setting
	13	Paper interval control allow/inhibit setting
44	01	Enable/Disable setting of toner density control correction
	16	Toner density control data check and toner density correction quantity display
	34	Transfer current setting
46	02	Copy density adjustment (600dpi)
	10	Copy exposure level adjustment, individual setting (Text) 600dpi
	11	Copy exposure level adjustment, individual setting (Photo) 600dpi
	12	Density adjustment in the FAX mode (Collective adjustments)
	13-16	Density adjustment in the FAX mode (Individual adjustments)
	19	Exposure mode setting (Gamma table setting/AE operation mode setting/ Photo image process setting)
	20	SPF/RSPF exposure correction *2
	29	Image contrast adjustment (600dpi)
	30	AE limit setting
	31	Image sharpness adjustment
	39	FAX IMAGE adjustment
48	01	Main/sub scanning magnification ratio adjustment
	05	SPF/RSPF mode sub scanning magnification ratio adjustment in copying *2
	08	FAX magnification ratio adjustment (scan)
	09	FAX magnification ratio adjustment (print)
49	01	Flash ROM program writing mode (MCU)
	02	Flash ROM program writing mode (NNB)
50	01	Image lead edge adjustment
	06	Copy lead edge position adjustment (SPF/RSPF) *2
	8	FAX lead edge adjustment (scan)
	10	Print off-center adjustment
	12	Document off-center adjustment
	18	Memory reverse position adjustment in duplex copy *1
	19	Rear edge void adjustment in duplex copy *5
51	02	Resist amount adjustment
53	08	SPF/RSPF scanning position automatic adjustment *2
61	02	Laser power correction ON/OFF (Invalidity)
	03	HSYNC output check
63	01	Shading check
64	01	Self print
65	10	Key ACK time setting display/non-display setting
	11	Info lamp setting

Main code	Sub code	Contents
66	01	FAX soft SW setting
	02	FAX soft SW initializing
	03	FAX PWB memory check
	04	Signal send mode
	06	Confidential pass code print
	07	Image memory content output
	10	Image memory contents clear
	11	300bps signal send
	13	Dial number registration
	17	DTMF signal send
	21	FAX information print
	24	FAST SRAM clear
	30	TEL/LIU status change check
	31	TEL/LIU setting
	32	Receive data check
	33	Signal detection check
	34	Communication time measurement
	37	Speaker sound volume adjustment
	38	Time setting/check
	42	PC program writing
	43	PIC adjustment value writing
	52	Pseudo ringer check
67	50	USB reception speed adjustment

<Execution inhibit conditions>

*1) Execution is inhibited when the duplex setup is OFF and other than RSPF is set.
*2) Execution is inhibited when OC.
*3) Execution is inhibited when SPF. (Not RSPF)
*4) Execution is inhibited when the job separator is not installed.
*5) Execution is inhibited when the model is not provided with the CRUM.
*6) Execution is inhibited when the duplex setup is OFF.

4. Contents of simulations

Main code	Sub code	Contents	Remark
01	01	**Mirror scanning operation** Used to check the operations of the scanner unit and its control circuit. Enter the number of times and the magnification ratio, and press [OK] key to operate the scanner unit. The speed is variable according to the specified magnification ratio. The number of scanning can be specified by entering a value to the right lower section of the LCD. •Setting range of magnification ratio: 25%-400% •Setting range of the number of scanning: 0-999 (When 0 is set, it means unlimited.) (Scan number input window) Sim1-1 SCAN CHECK ▲ 115% MHPS 100% ▼ 86% 123 ZOOM ◀100% ▶ 5 Set the scan magnification ration. This magnification ratio accords with the scan speed in actual copying. The setting range is 25% - 400%. Specify the scan number to be performed. The setting range is 0 - 999. When 0 is set, the number is unlimited. [OK] key or [START] Key (Execution window) Sim1-1 SCAN CHECK ▲ 115% MHPS 100% ▼ 86% 123 ZOOM ◀100% ▶ EXEC MHPS sensor status Scan counter Highlighted during execution Used to display the status (ON/OFF) of the mirror HP sensor on the LCD during scanning. (Highlighted at ON) "EXEC" is displayed to indicate execution is in process. The scan counter is displayed above "EXEC." This counter is counted up even in simulation. The copy lamp is lighted during scanning. [CA] key: Exits the simulation mode. [INTERRUPT] key: Returns to the sub code input window. [C] key: Input value clear Numeric keys: Input of the number of scanning	
	02	**Mirror home positions sensor (MHPS) status display** Used to monitor the mirror home position sensor and display the ON/OF status of the sensor on the LCD. Sim1-2 SENSOR CHECK MHPS MHPS(MIRROR HOME POSITION SENSOR) ON :Highlight display OFF :Normal display [CA] key: Exits the simulation mode. [INTERRUPT] key: Returns to the sub code input window.	

Main code	Sub code	Contents	Remark
02	01	**Single Paper Feeder(SPF)/Reversing single pass feeder(RSPF)aging** Used to check the operations of the SPF/RSPF unit and its control circuit. Enter the magnification ratio and press[OK] key or [START] key to drive the SPF/RSPF unit at the speed corresponding to the setting. (Magnification ratio selection window) Sim2-1 SPF AGING ▲115% 1SIDE 100% 2SIDE ▼ 86% ZOOM ◀100% ▶EXEC Select the scan magnification ratio (drive speed). This also accords with the magnification ratio and the speed in copying similarly to the OC. The setting range is 50% - 200%. [OK] key or [START] Key (Execution window) Sim2-1 SPF AGING ▲115% 1SIDE 100% 2SIDE ▼ 86% ZOOM ◀100% ▶EXEC "EXEC" is highlighted during execution. * When [INTERRUPT] key is press, the simulation is terminated and the machine returns to the sub code input window. * When [CA] key is pressed, the simulation is terminated and the machine exits the simulation mode.	
	02	**SPF/RSPF sensor status display** Used to display the sensor status in the SPF/RSPF section. An active sensor is highlighted. Sim2-2 SENSOR CHECK SPFP L1 W2 OCCV L2 W3 POUT W0 SPFC W1 Displayed name : Sensor name SPFP :SPF document transportation sensor OCCV :SPF unit (OC cover) open/close sensor POUT :SPF paper exit sensor SPFC :SPF paper feed cover open/close sensor L1 :SPF paper length sensor 1 L2 :SPF paper length sensor 2 W0 :SPF document set sensor W1 :SPF paper width sensor (small) W2 :SPF paper width sensor (middle) W3 :SPF paper width sensor (large) [CA] key: Exits the simulation mode. [INTERRUPT] key: Returns to the sub code input window.	Only when the SPF/RSPF is installed.
	03	**SPF/RSPF motor operation check** Used to check the operation of the SPF/RSPF motor and its control circuit. When this simulation is executed, the initial menu shown below is displayed. Select the magnification ratio to drive the motor. (Initial window = Magnification ratio selection window) Sim2-3 OUTPUT CHECK ▲115% 100% ▼ 86% ZOOM ◀100% ▶EXEC Select the scan magnification ratio (drive speed). This also accords with the magnification ratio and the speed in copying. The setting range is 50% - 200%. [OK] key or [START] Key (Execution window) Sim2-3 OUTPUT CHECK ▲115% 100% ▼ 86% ZOOM ◀100% ▶EXEC "EXEC" is highlighted during execution. [CA] key: The SPF/RSPF motor is stopped, and the machine exits the simulation mode. [INTERRUPT] key: The SPF/RSPF motor is stopped, and the machine returns to the sub code input window.	Only when the SPF/RSPF is installed.

Main code	Sub code	Contents	Remark
02	08	**SPF/RSPF paper feed solenoid operation check** Used to drive the SPF/RSPF paper feed solenoid (PSOL) 20 times in the cycle of 500msec of "ON" and 500msec of "OFF." After completion of the process, the machine returns to the sub code input window. (Initial window) Sim2-8 SPUS CHECK / PRESS OK KEY EXEC → [OK] key or [START] Key → (Execution window) Sim2-8 SPUS CHECK / EXEC When [INTERRUPT] key is pressed, the machine returns to the sub code input window. When [CA] key is pressed, the machine exits the simulation mode.	(Only when the SPF/RSPF is installed.}
	09	**RSPF reverse solenoid operation check** Used to drive the RSPF reverse solenoid (RSOL) 20 times in the cycle of 500msec of "ON" and 500msec of "OFF." After completion of the process, the machine returns to the sub code input window. (Initial window) Sim2-9 SPFS CHECK / PRESS OK KEY EXEC → [OK] key or [START] Key → (Execution window) Sim2-9 SPFS CHECK / EXEC When [INTERRUPT] key is pressed, the machine returns to the sub code input window. When [CA] key is pressed, the machine exits the simulation mode.	(Only when the RSPF is installed.)
	11	**SPF/RSPF PS release solenoid operation check** Used to drive the SPF/RSPF PS release solenoid (CLH) 20 times in the cycle of 500msec of "ON" and 500msec of "OFF." After completion of the process, the machine returns to the sub code input window. (Initial window) Sim2-11 CLH CHECK / PRESS OK KEY EXEC → [OK] key or [START] Key → (Execution window) Sim2-11 CLH CHECK / EXEC When [INTERRUPT] key is pressed, the machine returns to the sub code input window. When [CA] key is pressed, the machine exits the simulation mode.	(Only when the SPF/RSPF is installed.)
03	02	**Shifter/job separator sensor status display** Used to monitor the sensors related to the shifter and the job separator and display the sensor status on the LCD. An active sensor is highlighted. Sim3-2 SENSOR SFTHP JSUP JSDL TRYF TRYD Displayed name :Sensor name SFTHP :Shifter home position sensor JSUP :Job separator upper limit sensor JSDL :Job separator lower limit sensor TRYF :Tray full sensor TRYD : Paper exit sensor * Displayed only when the job separator is installed except for SFTH.	(Sensor of shifter is Japan only) (Only when the job separator is installed.)

Main code	Sub code	Contents	Remark
03	03	**Shifter operation check** Used to reciprocate the shifter 4 times. During execution, the status of the shifter HP sensor is displayed on the right upper section of the screen. (When the sensor is detected, the display is highlighted.) [CA] key: Exits the simulation mode. [INTERRUPT] key: Returns to the sub code input window. * When the above [CA] key or [INTERRUPT] key is pressed during operation of the shifter, the shifter is returned to the home position before terminating the operations. 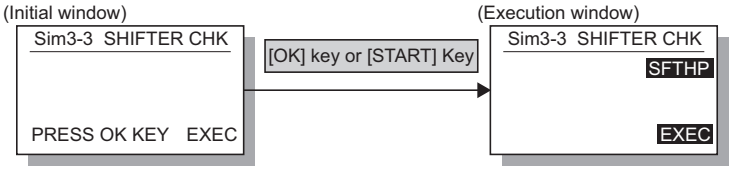 	Japan only
	04	**Job separator operation check** Used to operate the job separator up and down for 30sec. During operation, the status of the upper limit sensor and the lower limit sensor is displayed on the right upper section of the display. [CA] key: Exits the simulation mode. [INTERRUPT] key: Returns to the sub code input window. When the operation is interrupted, the job separator is shifted to the home position before terminating the simulation similarly to the shifter. 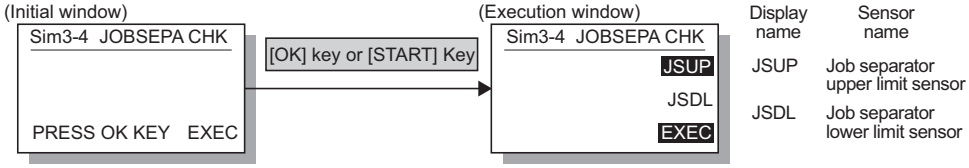 	(Only when the job separator is installed.)
	11	**Shifter home position check** Used to check the operations of the shifter HP sensor and the shifter. When this simulation is executed, the initial menu is displayed. By the following key operations, the left operation and the right operation of the home position sensor and the shifter can be executed separately. [◂] key: Shifts to R side by the specified steps. [▸] key: Shifts to F side by the specified steps. [▲] key: Shift to the home position. [SFTHP] is highlighted when the HP sensor is detected. 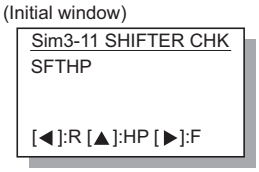 [CA] key: Exits the simulation mode. [INTERRUPT] key: Returns to the sub code input window.	Japan only

Main code	Sub code	Contents	Remark
05	01	**Operation panel display check** <LED/LCD check mode> Used to check the operations (ON, display) of the LED and the LCD on the operation panel. When this simulation is executed, all LED's on the operation panel (including 7SEG) are lighted and checking LCD is started. For the operation check of LCD, the area is divided into two sections; upper section and lower section, and the display cycle of Normal → Dark → Light → Off is repeated in each section. Each display period is 2sec. 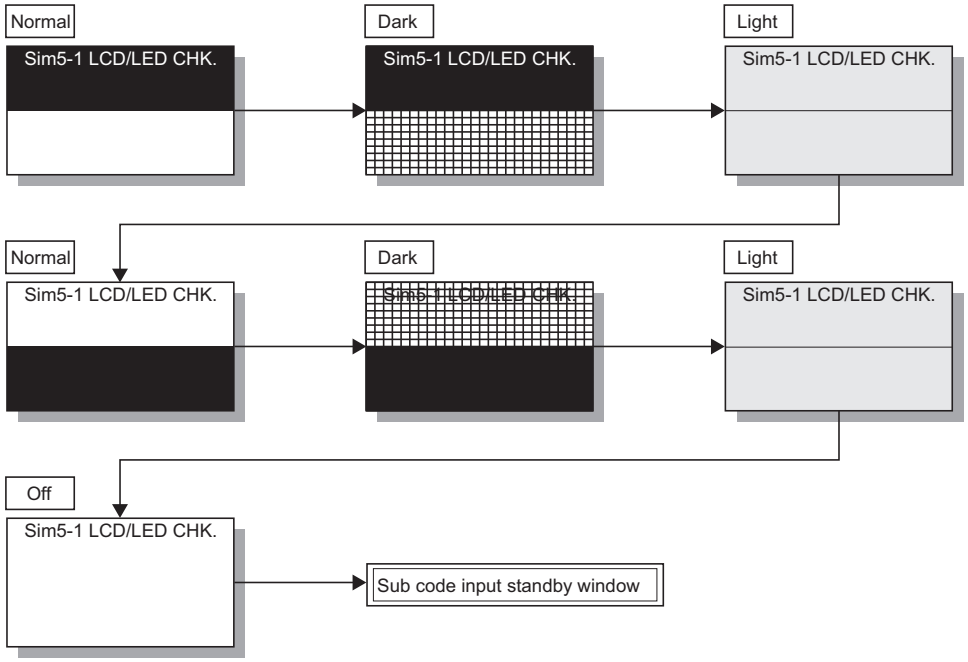 When [INTERRUPT] key is pressed in the LED check mode, the machine returns to the sub code input window. When [CA] key is pressed, the machine exits the simulation mode. When [START] key is pressed during LCD display, the machine goes to the key input check mode. <Key input check mode> Used to check that the keys on the operation panel are properly detected. When the machine enters the key input check mode, the initial menu is displayed. (Initial window) 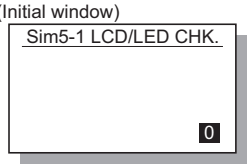 When any key is pressed, the value on the right lower side is counted up. If a key is pressed once, it is not counted again. When [CA] key is pressed for the first time, it is counted. When it is pressed for the second time, the simulation mode is terminated. When [INTERRUPT] key is pressed for the first time, it is counted. When it is pressed for the second time, the window returns to the sub code input standby window. * Note for the key input check mode [START] key must be pressed at the end. If it is pressed midway, the simulation judges that the last key is pressed and terminates the check mode. Multi input of tow or more keys is ignored.	

Main code	Sub code	Contents	Remark
05	02	**Fusing lamp and cooling fan operation check** Used to check the operations of the heater lamp and the cooling fan and the peripheral circuits. When this simulation is executed, the following initial menu is displayed. (Initial window) Sim5-2 HT LAMP / PRESS OK KEY EXEC → [OK] key or [START] Key → (Execution window) Sim5-2 HT LAMP / EXEC When this simulation is executed, the fusing lamp repeats ON/OFF 5 times in the cycle of 500ms. The cooling fan motor is rotated during that period. (The cooling fan, however, is rotated for about 8sec.) After completion of the operation, the machine returns to the sub code input window.	
	03	**Copy lamp lighting check** Used to check the operations of the copy lamp and its peripheral circuit. When this simulation is executed, the following initial menu is displayed. (Initial window) Sim5-3 COPY LAMP / PRESS OK KEY EXEC → [OK] key or [START] Key → (Execution window) Sim5-3 COPY LAMP / EXEC When [OK] key or [START] key is pressed, the copy lamp is lighted for about 5sec. After passing for 5sec, the machine returns to the sub code input window.	
06	01	**Paper feed/transport solenoid operation check** When this simulation is executed, the names of the solenoids which can be operated are displayed. Select a load to be operated with the numeric keys. (Load selection window) Sim6-1 OUTPUT CHECK 1:CPSOL 4:PSOL3 2:PSOL1 5:HPSOL 3:PSOL2 6:FSOL2 1/2 EXEC 1 ↓ Numeric keys (Load selection window) Sim6-1 OUTPUT CHECK 1:CPSOL 4:PSOL3 2:PSOL1 5:HPSOL 3:PSOL2 6:FSOL2 1/2 EXEC 2 ↓ [OK] key or [START] Key (Execution window) Sim6-1 OUTPUT CHECK 1:CPSOL 4:PSOL3 2:PSOL1 5:HPSOL 3:PSOL2 6:FSOL2 1/2 EXEC 2 → After completion of execution → (Load selection window) 1: CPSOL :Cassette 1 paper feed solenoid 2: PSOL1 :Cassette 2 paper feed solenoid (*) 3: PSOL2 :Cassette 2 paper feed solenoid (*) 4: PSOL3 :Cassette 3 paper feed solenoid (*) 5: HPSOL :Manual feed tray paper feed solenoid 6: FSOL2 :Cassette 2 transport solenoid (*) 7: FSOL3 :Cassette 3 transport solenoid (*) (*) Supported only for the model with the option installed. Skipped for the other models without installation. During execution, the selected solenoid repeats ON/OFF 20 times for every 500ms.	
	02	**Resist roller solenoid (RRS) operation check** When this simulation is executed, the machine goes to the execution start window. When [OK] key or [START] key is pressed, the resist roller solenoid (RRS) repeats ON of 500ms and OFF of 500ms 20 times. (Execution start window) Sim6-2 RRS CHECK / PRESS OK KEY EXEC → [OK] key or [START] Key → (Execution window) Sim6-2 RRS CHECK / EXEC When the operation is completed, the machine returns to the sub code input window. When [INTERRUPT] key is pressed, the machine returns to the sub code input window. When [CA] key is pressed, the machine exits the simulation mode.	

Main code	Sub code	Contents	Remark
07	01	**Warm-up display and aging with jam detection** Used to measure the warm-up time and execute aging with jam detection. When this simulation is executed, the following warm-up window is displayed. The time required for starting the warm-up and completing the initializing operation and shifting to the stand-by state is displayed. After completion of warm-up, press [CA] key to exit the simulation mode, allowing normal copy operations. The copy mode at that time is the aging mode with 0sec of intermittent aging. 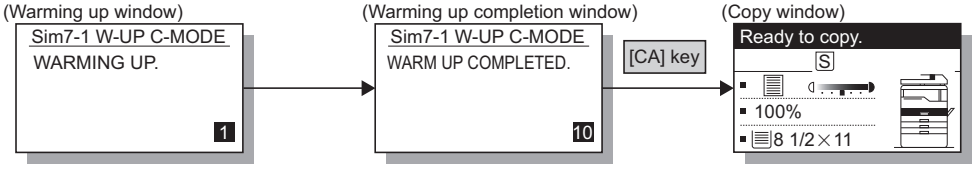 Canceled by turning off the power or executing a simulation which makes the hardware reset. When the interruption is pressed to shift to the input standby window, the machine does not enter the aging mode.	
	06	**Intermittent aging** Used to execute intermittent aging of 3sec. The set quantity and the mode are optionally selected. When this simulation is executed, the following execution start window is displayed. When [OK] key or [START] key is pressed, the machine exits the simulation mode. Enter a desired coy mode and a desired copy quantity. Press [START] key, and intermittent aging will be started. 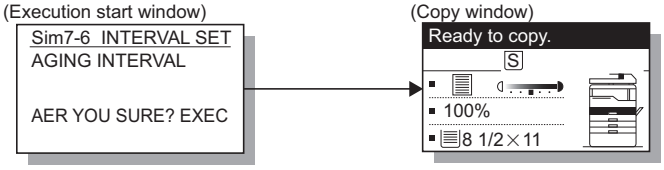 It is canceled by turning off the power or executing a simulation with the hard reset.	
	08	**Shifting with warm-up display** Used to measure the warm-up time. When this simulation is executed, the following warm-up window is displayed. The time required for starting the warm-up and completing the initializing operation and shifting to the stand-by state is displayed. * Though [CA] key is pressed, the machine does not enter the aging mode of intermission 0 sec. 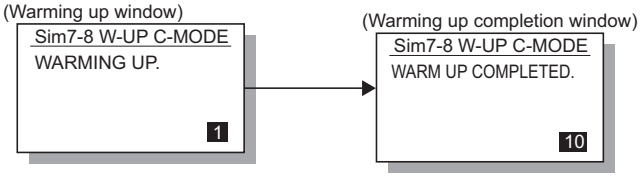 Press [CA] key to exit the simulation mode. (The aging function is omitted from SIM 07-01.) Note: Toner supply operation is not performed during this simulation.	
08	01	**Developing bias output** Used to check the developing bias output. When this simulation is executed, the following execution start window is displayed. When [OK] key or [START] key is pressed, the developing bias signal is turned ON for 30sec. When measuring the actual output value, however, use SIM 25-01. After completion of the process, the machine returns to the sub code input window. 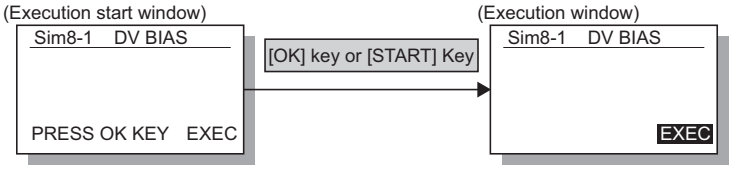 [CA] key: Exits the simulation mode. [INTERRUPT] key: Interrupts output operation and shifts to the sib code input window.	

Main code	Sub code	Contents	Remark
08	02	**Main charger output (Grid = HIGH)** Used to check the main charger output. When this simulation is executed, the following execution start window is displayed. When [OK] key or [START] key is pressed, the main charger is turned on for 30 sec in the grid voltage HIGH mode. After completion of the process, the machine returns to the sub code input window. 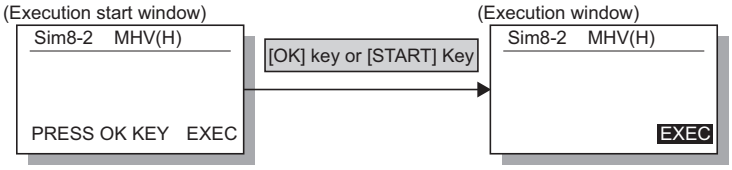 [CA] key: Exits the simulation mode. [INTERRUPT] key: Interrupts output operation and shifts to the sub code input window.	
	03	**Main charger output (Grid = LOW)** Used to check the main charger output. When this simulation is executed, the following execution start window is displayed. When [OK] key or [START] key is pressed, the main charger is turned on for 30 sec in the grid voltage LOW mode. After completion of the process, the machine returns to the sub code input window. 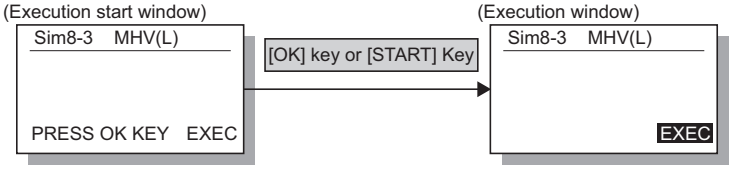 [CA] key: Exits the simulation mode. [INTERRUPT] key: Interrupts output operation and shifts to the sub code input window.	
	06	**Transfer charger output** When this simulation is executed, the machine shifts to the following mode select window, and the list of the modes to be outputted is displayed. Select an output mode with numeric keys and press [OK] key or [START] key, and the transfer charger output is made for about 30sec in the specified mode. 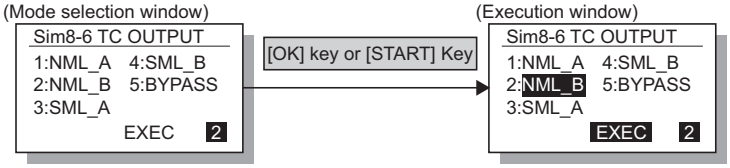 Window display → Output mode 1:NML_A → Normal size width (front) 2:NML_B → Normal size width (back) 3:SML_A → Small size width (front) 4:SML_B → Small size width (back) * The items of (back) is not displayed when DUPLEX setting is OFF. * Small size paper is Letter R (A4R) width or below. When an output is completed, the machine shifts to the mode select window. [CA] key: Exits the simulation mode. [INTERRUPT] key: Interrupts the output operation, and shifts to the sub code input window.	

Main code	Sub code	Contents	Remark
09	01	**Duplex motor forward rotation check** Used to check the duplex motor rotation. The duplex motor is rotated in the normal direction (paper exit direction) for 30sec. After completion of the process, the machine shifts to the sub code input window. (Execution start window) Sim9-1 DMF CHECK / PRESS OK KEY EXEC → [OK] key or [START] Key → (Execution window) Sim9-1 DMF CHECK / EXEC [CA] key: Exits the simulation mode. [INTERRUPT] key: Interrupts the output operation, and shifts to the sub code input window.	(Execution is not allowed when DUPLEX setting is OFF.)
	02	**Duplex motor reverse rotation check** Used to check the duplex motor reverse rotation. The duplex motor is rotated in the reverse direction for 30sec. After completion of the process, the machine shifts to the sub code input window. (Execution start window) Sim9-2 DMR CHECK / PRESS OK KEY EXEC → [OK] key or [START] Key → (Execution window) Sim9-2 DMR CHECK / EXEC [CA] key: Exits the simulation mode. [INTERRUPT] key: Interrupts the output operation, and shifts to the sub code input window.	(Execution is not allowed when DUPLEX setting is OFF.)
	04	**Duplex motor RPM adjustment** Used to adjust the duplex motor rotation speed. When this simulation is executed, the following setting window is displayed. Enter an input value with numeric keys and press [OK] key or [START] key. The setting range is in 1-13 steps. (Setting window) Sim9-4 MOTOR SPEED / 1:MOTOR SPEED 4 / [1-13] 4 • 18cpm/20cpm machine: Set value : Speed (PPS) 01 : 637.2PPS (Slow) 02 : 640.4PPS 03 : 643.6PPS 04 : 646.9PPS 05 : 650.1PPS 06 : 653.3PPS 07 : 656.5PPS 08 : 659.8PPS 09 : 662.9PPS 10 : 666.2PPS 11 : 669.4PPS 12 : 672.6PPS • 23cpm machine: Set value : Speed (PPS) 01 : 760.2PPS (Slow) 02 : 764.1PPS 03 : 768.0PPS 04 : 771.8PPS 05 : 775.7PPS 06 : 779.5PPS 07 : 783.3PPS 08 : 787.2PPS 09 : 791.0PPS 10 : 794.8PPS 11 : 798.6PPS 12 : 802.5PPS When a value outside the setting range is inputted, it is ignored. [CA] key: Exits the simulation mode. [INTERRUPT] key: Shift to the sub code input window.	Default: 4
	05	**Duplex motor switchback time adjustment** Used to adjust the duplex motor switchback time when the motor reverse rotation is controlled. When this simulation is executed, the following setting window is displayed. Enter an input value with numeric keys and press [OK] key or [START] key. The setting range is 50-76. When the adjustment value is increased by 1, the distance up to reverse start is increased by 3 steps in 1-2 phase excitement. Sim9-5 SW BACK TIME / 1:SW BACK TIME 50 / [50-76] 50 When a value outside the setting range is inputted, it is ignored. [CA] key: Exits the simulation mode. [INTERRUPT] key: Shift to the sub code input window.	Default: 50

Main code	Sub code	Contents	Remark
10	-	**Toner motor operation** Used to check the operation of the toner motor. When this simulation is executed, the following execution start window is displayed. Press [OK] key or [START] key, and the toner motor is rotated for about 30sec. After completion of the process, the machine shifts to the sub code input window. (Execution start window) Sim10 TONER MOTOR PRESS OK KEY EXEC [OK] key or [START] Key (Execution window) Sim10 TONER MOTOR EXEC [CA] key: Exits the simulation mode. [INTERRUPT] key: Interrupts the output operation, and shifts to the sub code input window.	
14	-	**Trouble cancel (except for U2)** * Used to cancel EEPROM writing troubles such as H trouble and execute the hard reset. When this simulation is executed, the following execution start window is displayed. Press [OK] key or [START] key to clear the trouble other than U2. (Execution start window) Sim14 TROUBLE CLEAR TROUBLE CLEAR (WITHOUT U2) AER YOU SURE? EXEC	
16	-	**U2 trouble cancel** * Used to cancel the U2 trouble and execute the hard reset. When this simulation is executed, the following execution start window is displayed. Press [OK] key or [START] key to clear the U2 trouble. (Execution start window) Sim16 TROUBLE CLEAR U2 TROUBLE CLEAR AER YOU SURE? EXEC	
20	01	**Maintenance counter clear** Used to clear the maintenance counter. Press [OK] key or [START] key on the following window, the maintenance counter is cleared and the machine returns to the sub code input window. Sim20-1 COUNTER CLR MAINTENANCE COUNTER CLEAR AER YOU SURE? EXEC	
21	01	**Maintenance cycle setting** Used to set the maintenance cycle. When this simulation is executed, the current set value is displayed. Enter a desired code with numeric keys and press [START] key. The set value is saved in the EEPROM and the machine returns to the sub code input window. Sim21-1 CYCLE SET. 1:MAINTE CYCLE 4 [0- 5] 4 0: 5K (5,000 sheets) 1: 7.5K (7,500 sheets) 2: 10K (10,000 sheets) 3: 25K (25,000 sheets) 4: 50K (50,000 sheets) 5: FREE (999,999 sheets) (Setting range: 0 - 5) [CA] key: Exits the simulation mode. [INTERRUPT] key: Returns to the sub code input window.	Default: 4

Main code	Sub code	Contents	Remark
22	01	**Counters display** Sim22-1 COUNTER 1/4 TOTAL :nnnnnnn MAINTE :nnnnnnn DEV :nnnnnnn(*) DRUM :nnnnnnn ▼key ▲key Sim22-1 COUNTER 2/4 CPY JOB : nnnnnnn PRT JOB : nnnnnnn SCN JOB : nnnnnnn OC SCN : nnnnnnn ▼key ▲key Sim22-1 COUNTER 3/4 SPF : nnnnnnn DUPLEX : nnnnnnn OTHERS : nnnnnnn MNTCYC : nnnnnnn ▼key ▲key Sim22-1 COUNTER 4/4 DEV TTL : nnnnnnn DRM TTL : nnnnnnn Counter display TOTAL : Total counter MAINTE : Maintenance counter DEV : Development counter DRUM : Drum counter CPY JOB : Copy job counter PRT JOB : Print job counter SCN JOB : Scan job counter OC SCN : OC scan counter SPF : SPF/RSPF counter DUPLEX : DUPLEX counter OTHERS : Other counter MNTCYC : Maintenance cycle DEV TTL : Development rotation accumulated time DRM TTL : Drum rotation accumulated time Though SIM26-74 is set to "1: Scan counter is added," the count is not added to SIM22-01 total counter display. The setting affects only the total counter display in the system settings.	
	03	**Jam memory display** Used to check the jam kind occurred in the main unit and the SPF/RSPF. The kinds of jams up to 30 items are displayed sequentially from the latest one. (The oldest one is deleted sequentially.) This display is used for troubleshooting. (If there are extremely many troubles in a position, it may be judged that a repair must be executed.) The kinds and contents of jams to be displayed are as follows. Sim22-3 JAM HIS. 1/4 XXXXXXX XXXXXXX XXXXXXX XXXXXXX XXXXXXX XXXXXXX XXXXXXX XXXXXXX ▼key ▲key Sim22-3 JAM HIS. 2/4 XXXXXXX XXXXXXX XXXXXXX XXXXXXX XXXXXXX XXXXXXX XXXXXXX XXXXXXX Kinds of jams and display contents SPPD_ON : SPF paper entry sensor (Not reached) SPPD_OFF : SPF paper entry sensor (Remaining) SOUT_ON : SPF paper exit sensor (Not reached) SOUT_OFF : SPF paper exit sensor (Remaining) POUT_ON : Paper exit sensor (Not reached) POUT_OFF : Paper exit sensor (Remaining) DPX_ON : DUP sensor (Not reached) DPX_OFF : DUP sensor (Remaining) PIN_ON : Paper feed sensor (Not reached) PIN_OFF : Paper feed sensor (Remaining) PIN2_ON : Cassette 2 paper feed sensor (Not reached) PIN3_ON : Cassette 3 paper feed sensor (Not reached) PIN4_ON : Cassette 4 paper feed sensor (Not reached) [CA] key: Exits the simulation mode. [INTERRUPT] key: Shifts to the sub code input window. ▲ key, ▼ key: Switches to another page.	
	04	**Jam total counter display** Used to display the jam total counter. Sim22-4 COUNTER JAM : nnnnnn	

Main code	Sub code	Contents	Remark
22	07	**System setting code display** Used to display the system setting code. Sim22-7 SYSTEM SYS CODE: nnnnn	
	09	**Paper feed counter display** Used to display the paper feed quantity of each paper feed tray. This simulation shows the use frequency of each paper feed section. [CA] key: Exits the simulation mode. [INTERRUPT] key: Shifts to the sub code input window. ▲ key, ▼ key: Switches to another page. Sim22-9 COUNTER 1/2 BYPASS : nnnnnnn TRAY1 : nnnnnnn TRAY2 : nnnnnnn TRAY3 : nnnnnnn ▼key → ← ▲key Sim22-9 COUNTER 2/2 TRAY4 : nnnnnnn * TRAY2-TRAY4 are displayed only when they are installed.	
	11	**FAX-related counter display.** Used to display the current FAX send/receive counter value. Sim22-11 FAX COUN. SELECT COUNTER 1:COMM. PAGE 2:COMM. TIME (1 - 3) ▼ → ← ▲ Sim22-11 FAX COUN. SELECT COUNTER 3:PRINT PAGE (1 - 3) [CA] key : Simulation cancel [INTERRUPT] key: Sub code input window [1] key [OK] key → Sim22-11 FAX COUN. COMM. PAGE SND xx, xxx, xxx RCV xx, xxx, xxx → Return [2] key [OK] key → Sim22-11 FAX COUN. COMM. TIME SND:hhhhhhhh:mm:ss RCV:hhhhhhhh:mm:ss → Return [3] key [OK] key → Sim22-11 FAX COUN. PRINT PAGE xxxxxxxx	
	13	**CRUM destination display** Used to display the CRUM chip destination code saved in the EEPROM. If the display does not match the destination code saved in the CRUM chip, it is judged as an error. * This simulation is valid only for the model with the CRUM chip. Sim22-13 CRUM CRUM TYPE nn Number : Setting (Destination) 00 : Not set. 01 : Destination-A (North America) 02 : Destination-B (Europe) 03 : Destination-C (SMEF) 04 : CHN-A 05 : JPN-A Number : Setting (Destination) 06 : Destination-X (Iran) 99 : Conversion	
	14	**P-ROM version display** Sim22-14 ROM VER1/2 S/N : ---------- MCU : --.-- NNB : --.-- PNL : --.-- Sim22-14 ROM VER2/2 FAX : --.-- S/N :Production serial number MCU :Main unit program version NNB :NNB program version PNL :Panel program version FAX :FAX program version The version of the option board which is not installed is not displayed.	

Main code	Sub code	Contents	Remark
22	15	**Trouble memory display** The latest 20 troubles are displayed. (The oldest one is overwritten sequentially.) [CA] key: Exits the simulation mode. [INTERRUPT] key: Shifts to the sub code input window. ▲ key, ▼ key: Switches to another page. 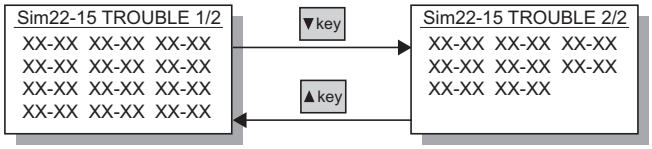 The display sequence is as shown below. 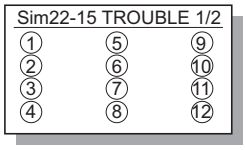 In this case, (1) is the latest one and (12) is the oldest.	
	22	**SPF/RSPF jam counter display** Used to display the SPF/RSPF JAM counter. When [INTERRUPT] key is pressed, the machine goes to the sub code input window. When [CA] key is pressed, the machine exits the simulation mode. 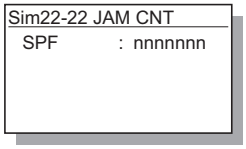 	(Only when the SPF/RSPF is installed.)
24	01	**Jam total counter clear** When this simulation is executed, the clear confirmation window is displayed as shown below. When [OK] key or [START] key is pressed, the jam total count and the jam memory are cleared and the machine shifts to the sub code input window. 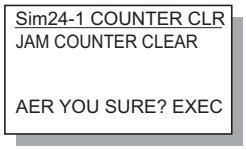 	
	02	**Trouble memory clear** Used to clear the trouble memory and the trouble history data in the EEPROM. When [INTERRUPT] key is pressed, the machine shifts to the sub code input window. When [CA] key is pressed, the machine exits the simulation mode. 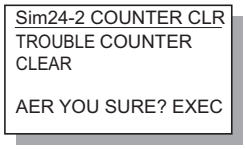 	(Only when the SPF/RSPF is installed.)
	04	**SPF/RSPF counter clear** Used to clear the SPF/RSPF paper feed counter. 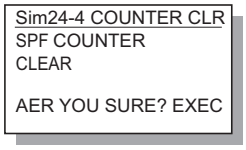 [CA] key: Exits the simulation mode. [INTERRUPT] key: Shifts to the sub code input window.	

Main code	Sub code	Contents	Remark
24	05	**Duplex print counter clear** Used to clear the duplex print counter. Sim24-5 COUNTER CLR DUPLEX COUNTER CLEAR AER YOU SURE? EXEC [CA] key: Exits the simulation mode. [INTERRUPT] key: Shifts to the sub code input window.	(Execution is not allowed when DUPLEX setting is OFF.)
	06	**Paper feed counter clear** Used to clear the paper feed counter data in each paper feed section. (Initial window) Sim24-6 COUNTER CLR 1:BYPASS 4:TRAY3 2:TRAY1 5:TRAY4 3:TRAY2 0 Numeric Key (Counter selection window) Sim24-6 COUNTER CLR 1:BYPASS 4:TRAY3 2:TRAY1 5:TRAY4 3:TRAY2 2 [C] Key [OK] key or [START] key (Confirmation window) Sim24-6 COUNTER CLR 1:BYPASS 4:TRAY3 2:TRAY1 5:TRAY4 3:TRAY2 ARE YOU SURE? 2 Return [OK] key or [START] key * TRAY2-TRAY4 are displayed only when they are installed. [CA] key: Exits the simulation mode. [INTERRUPT] key: Shifts to the sub code input window.	
	07	**Drum counter clear** Used to clear the drum counter and the drum rotating time. Sim24-7 COUNTER CLR DRUM COUNTER CLEAR AER YOU SURE? EXEC [CA] key: Exits the simulation mode. [INTERRUPT] key: Shifts to the sub code input window.	
	08	**Copy counter clear** Used to clear the copy counter. Sim24-8 COUNTER CLR COPIES COUNTER CLEAR AER YOU SURE? EXEC [OK] key or [START] key: Clears the copy counter and shifts to the sub code input window. [CA] key: Exits the simulation mode. [INTERRUPT] key: Shifts to the sub code input window.	
	09	**Printer counter clear** Used to clear the printer counter and other counters. Select a counter to be cleared and press [OK] key or [START] key. The confirmation window is displayed. Press [OK] key or [START] key again, and the specified counter is cleared and the machine returns to the initial window. Numeric key input Sim24-9 COUNTER CLR 1:PRINT 2:OTHER 1 [OK] key or [START] key Sim24-9 COUNTER CLR 1:PRINT 2:OTHER ARE YOU SURE? 1 [BACK] key [OK] key or [START] key (Counter clear) [CA] key: Exits the simulation mode. [INTERRUPT] key: Shifts to the sub code input window.	

Main code	Sub code	Contents	Remark
24	10	**FAX-related counter clear** Used to clear the current FAX send/receive counter value (number of pages of send/receive), the accumulated time of send/receive, and the print counter to 0. 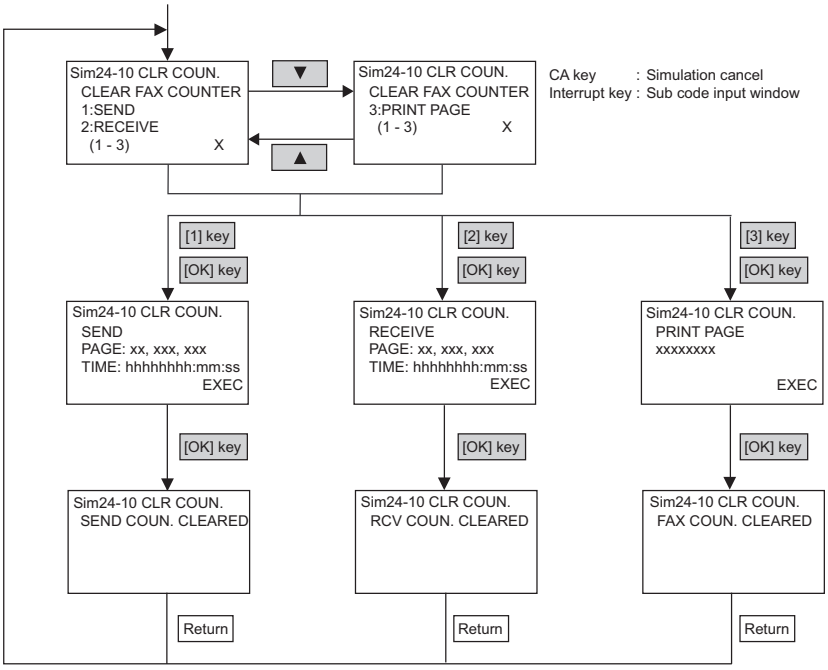 When the number of pages of send is cleared, the PC-FAX counter is also cleared.	
	13	**Scanner counter clear** Used to clear the scanner counter. Sim24-13 COUNTER CLR SCAN COUNTER CLEAR AER YOU SURE? EXEC [OK] key or [START] key: Clears the scanner counter and shifts to the sub code input window. [CA] key: Exits the simulation mode. [INTERRUPT] key: Shifts to the sub code input window.	
	14	**SPF/RSPF jam total counter clear** Used to clear the SPF/RSPF jam total counter. Sim24-14 COUNTER CLR SPF JAM COUNTER CLEAR AER YOU SURE? EXEC [OK] key or [START] key: Clears the SPF/RSPF jam total counter and shifts to the sub code input window. [CA] key: Exits the simulation mode. [INTERRUPT] key: Shifts to the sub code input window.	(Only when the SPF/RSPF is installed.)
	15	**Scanner mode counter clear** Used to clear the scanner mode counter. Sim24-15 COUNTER CLR SCANNER MODE COUNTER CLEAR AER YOU SURE? EXEC [OK] key or [START] key: Clears the scanner mode counter and shifts to the sub code input window. [CA] key: Exits the simulation mode. [INTERRUPT] key: Shifts to the sub code input window.	

Main code	Sub code	Contents	Remark
25	01	**Main motor operation check (Cooling fan motor rotation check)** When [OK] key or [START] key is pressed, the main motor (as well as the duplex motor in the case of the duplex model) is rotated for 30 sec. If the developing unit is installed to save toner consumption at that time, the developing bias, the main charger, and the grid are also outputted. In addition, since laser discharge is required when the motor is stopped, the polygon motor is also operated. Check if the developing unit is installed or not. If it is not installed, the previous high voltage is not outputted and only the motor is rotated. After completion of 30sec operation, the machine shifts to the sub code input window. * This simulation must not be executed with the door open/close switch forcibly turned ON. 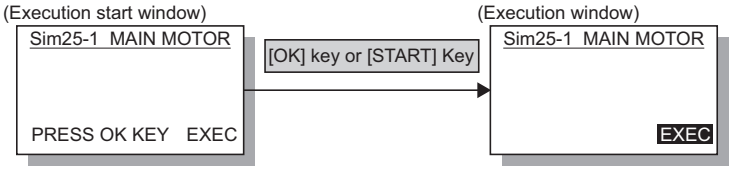 After completion of the process, the machine shifts to the sub code input window. [CA] key: Exits the simulation mode. [INTERRUPT] key: Interrupts the output operation, and shifts to the sub code input window.	
	02	**Auto developer adjustment (Initial setting of toner density when replacing developer)** To execute this simulation, perform the following procedures. **[Procedures]** 1) Check to confirm that the machine power is turned OFF. Install the DV unit. 2) With the cover open, turn ON the machine power. 3) The machine goes to the SIM25-02 mode. ("Cover open MSG" is displayed. Start LED: OFF.) 4) Close the side cover. (Start LED:ON) 5) Press [OK] key or [START] key. When [OK] key or [START] key is pressed, the main motor rotates for 3 minutes to determine the toner sensor reference value and clear the developer rotation time, in addition, the developer counter is cleared. When the procedures are completed normally, the ATC sensor reference value is displayed on the value display section. In case of an error, the following screen is displayed. 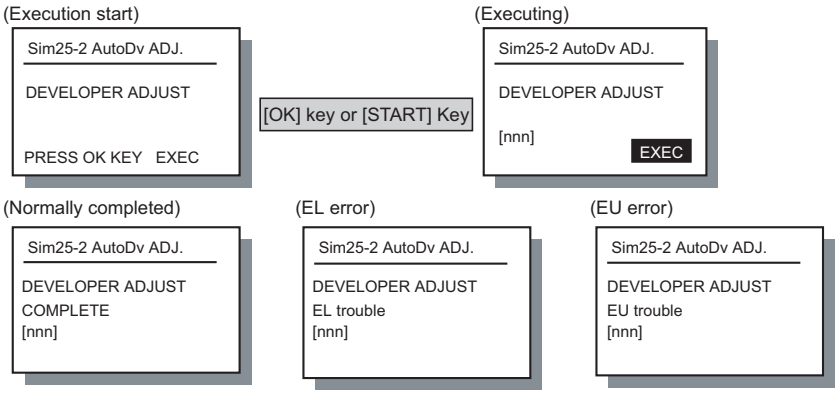 Note: When the machine is not in the simulation mode, if the front cover is closed and the machine power is turned ON, toner may be supplied from the toner cartridge to the developer cartridge. Under this state, the toner density reference control level adjustment cannot be performed properly. If, therefore, the front cover is closed and the machine power is turned ON when the machine is not in the simulation mode, dispose developer, supply new developer, and adjust the toner density reference level. It takes about 3 minutes to complete the SIM25-02. Never open the front cover or turn OFF the machine power during execution of this simulation.	

<table>
<tr><th>Main code</th><th>Sub code</th><th>Contents</th><th>Remark</th></tr>
<tr><td>25</td><td>10</td><td>

Polygon motor operation check

When [OK] key or [START] is pressed, the polygon motor is rotated for 30sec.

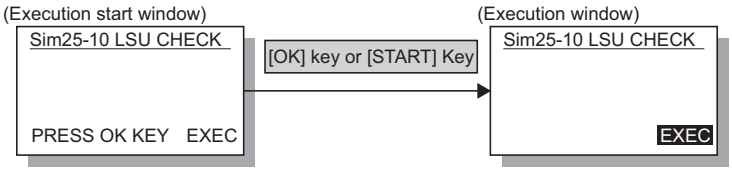

After completion of the process, the machine shifts to the sub code input window.
[CA] key: Exits the simulation mode.
[INTERRUPT] key: Interrupts the output operation, and shifts to the sub code input window.

</td><td></td></tr>
<tr><td>26</td><td>01</td><td>

Job separator setting

Used to set YES/NO of installation of the hob separator.
After installation of the job separator, setting must be manually set to YES.

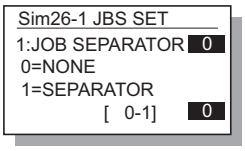

0 : No job separator
1 : Job separator provided

[CA] key: Exits the simulation mode. (When setting is changed, the machine exits the simulation mode and performs the hard reset.)
[INTERRUPT] key: Shifts to the sub code input window. (When setting is changed, it is invalid.)
[START] key: Setting contents are saved in the EEPROM and the machine shifts to the code input window. (When setting is changed, the machine does not shift to the code input window.)

</td><td></td></tr>
<tr><td></td><td>02</td><td>

Size setting

Used to set Enable/Disable of FC (8.5" x 13") size detection and mexican legal size detection.

Window display	Code number	Setting
1: B4/LG, FC	0	FC detection disable (The set values to items marked with ⋆ are ignored.)
	1	(Follows the setting of items below marked with ⋆.)
2: Use Mex Legal	0	⋆ Mexican legal detection disable (FC detection enable)
	1	⋆ Mexican legal detection enable (FC detection disable)

Detection size when FC (8.5" x 13") size and mexican legal size document is used.

	Unit to be used	Destination	Destination	Detection size		
				1: B4/LG, FC: 0	1: B4/LG, FC	
					2: Use Mex Legal: 0	2: Use Mex Legal: 1
Document	SPF	EX Japan AB series (FC)	FC(8.5"x13")	B4	FC (8.5"x13")	Mexican legal (8.5"x13.4")
			B4			
		Inch series (FC)	FC(8.5"x13")	LG (8.5"x14")		
			LG(8.5"x14")			

* For destinations other than the above, this setting is invalid.

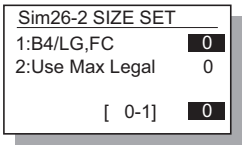

Code: Setting
0 : Detection disabled
1 : FC detection enabled

</td><td></td></tr>
</table>

<table>
<tr><th>Main code</th><th>Sub code</th><th>Contents</th><th>Remark</th></tr>
<tr><td rowspan="3">26</td><td>03</td><td>Auditor setting

Used to set the auditor.

Sim26-3 AUDITOR SET
1:AUDITOR 0
0=P10 1=VENDOR
2=OTHER
[0-2] 0

Code: Mode
0 : Built-in auditor mode
1 : Coin vendor
2 : Other

* When the coin vendor mode is selected:
1. Sort auto select is OFF.
2. For Japan, the duplex copy use inhibition setting is ON (inhibited).
3. When the auditor mode exclusive-setting is ON (manual paper feed inhibited) and the standard tray is set to the manual feed tray, the standard tray setting is set to the main tray.</td><td>Default:
0</td></tr>
<tr><td>04</td><td>Copier duplex setting

Used to set YES/NO of duplex setting.
This must be set to ON when the duplex unit is installed. If this setting is set to OFF on the duplex machine, the duplex motor does not rotate and paper is not discharged normally, resulting in a paper jam.

Sim26-4 DUPLEX SET
1:DUPLEX 0
0=OFF 1=ON
[0-1] 0

Code: Duplex setting
0 : OFF
1 : ON</td><td>Default:
0: MX-M182
1: MX-M182D
MX-M202D
MX-M232D</td></tr>
<tr><td>05</td><td>Count mode setting

Used to set the count-up number of the total counter, the developer counter, and the maintenance counter individually when a special paper (A3/WLT/8K) is passed.
When this simulation is executed, the current set value is displayed.

Sim26-5 COUNT MODE
1:COUNT MODE 1
[0-3] 1

<table>
<tr><th>Setting</th><th>Total/Developer</th><th>Maintenance</th></tr>
<tr><td>0</td><td>+2</td><td>+2</td></tr>
<tr><td>1</td><td>+1</td><td>+2</td></tr>
<tr><td>2</td><td>+2</td><td>+1</td></tr>
<tr><td>3</td><td>+1</td><td>+1</td></tr>
</table>

[1]-[3]:
Enter a value with numeric keys, and press [OK] key or [START] key to save the current adjustment value to the EEPROM. The machine returns to the sub code input window.</td><td>Default:
0</td></tr>
</table>

Main code	Sub code	Contents	Remark
26	06	**Destination setting** Used to set the destination of the main unit. When this simulation is executed, the code number of currently set destination is displayed. Sim26-6 DESTINATION 1:DESTINATION 0 0=JAPAN [0-6] 0 Code :Setting 0=JAPAN : Japan AB series 1=INCH : Inch series 2=AB : Ex Japan AB series 3=INCH(FC) : Ex Japan inch series (FC) 4=AB(FC) : Ex Japan AB series (FC) 5=CHINESE : China (EX Japan AB series + Chinese paper support) 6=TAIPEI : Taiwan (EX Japan AB series + Chinese paper support) (Setting range 0 - 6) [0] - [6] (Default: Depends on the model.) Enter a value with numeric keys, and press [OK] key or [START] key, and the current adjustment value is saved in the EEPROM. [CA] key: Exits the simulation mode. (When setting is changed, the machine exits the simulation mode and performs the hard reset.) [INTERRUPT] key: Shifts to the sub code input window. (When setting is changed, it is invalid.) [START] key: Setting contents are saved in the EEPROM and the machine shifts to the code input window. (When setting is changed, the machine does not shift to the code input window.) * When this setting is changed, the following adjustment values and the set values are automatically changed according to the set destination. O SIM46-19 (γ table setting) O SIM46-30 (AE limit setting) O Paper size (A4 for AB series, LT for inch series) O Maintenance cycle (Returns to the default (Japan/Ex Japan).) O Mini maintenance cycle (Only when setting is changed to Japan.)	Default: Differs depending on each destination.
	07	**Machine condition check** When this simulation is executed, the copy speed of the machine is displayed. Sim26-7 CPM CHECK 18CPM Displayed CPM list 18CPM 20CPM 23CPM [CA] key: Exits the simulation mode. [INTERRUPT] key: Shifts to the sub code input window.	
	08	**Manual transfer shaking countermeasures setting** Used to set the countermeasures against manual transfer shaking. When this simulation is executed, the current set value is displayed. Enter a set value with numeric keys and press [OK] key or [START] key. The set value is saved in the EEPROM. Sim26-08 TC FADE SET 1:TC FADE 0 0=OFF 1=ON [0-1] 0 Code: Setting 0: Manual transfer shaking countermeasures OFF 1: Manual transfer shaking countermeasures ON [CA] key: Exits the simulation mode. [INTERRUPT] key: Shifts to the sub code input window.	
	18	**Toner save mode setting** Used to switch ON/OFF of the toner save mode. When this simulation is executed, the current set value is displayed. Enter a set value with numeric keys and press [OK] key or [START] key. The set value is saved in the EEPROM. * When this setting is changed, the toner save setting of the system settings is also changed accordingly. Sim26-18 TONER SAVE 1:TONER SV MODE 0 0=OFF 1=ON [0-1] 0 Code: Setting 0: Toner save OFF 1: Toner save ON [CA] key: Exits the simulation mode. [INTERRUPT] key: Shifts to the sub code input window.	Default: 0

Main code	Sub code	Contents	Remark
26	20	**Job separator paper exit mode setting** Used to set the paper exit mode of the job separator. * The purpose is to allow the simplified check when the job separator option is installed. It is valid only during the adjustment simulation. Without installing a printer or a FAX machine, paper is discharged to the upper stage to check if there is no problem or not. If SIM26-01 is set to "Job separator not installed," paper is discharged to the lower stage regardless of this setting. Sim26-20 JOBSEP OUT 1:JOBSEP OUT 0 0=OFF 1=ON [0-1] 0 Code: Setting 0: Lower tray 1: Upper tray [CA] key: Exits the simulation mode. [INTERRUPT] key: Shifts to the sub code input window.	Default: 0
	22	**Language setting clear** Used to clear the language setting. The scanner head is shifted to the fixing lock position. (Intial display) Sim26-22 LANGUAGE LANGUAGE SETTING CLEAR AER YOU SURE? EXEC [OK] key or [START] Key (Execution is started) Sim26-22 LANGUAGE LANGUAGE SETTING CLEAR EXEC Sim26-22 LANGUAGE PLEASE SHUT OFF THE POWER. After completion of counter clear and shifting to the lock position.	
	30	**CE mark conformity control ON/OFF** Used to set Yes/No of CE mark conformity. When this simulation is executed, the current set value is displayed. Enter a value with numeric keys and press [OK] key or [START] key. The set value is saved to EEPROM and the machine returns to the sub code input window. Sim26-30 CE MARK 1:CE MARK CTRL 0 0=OFF 1=ON [0-1] 0 Code: Setting 0 : CE mark support control OFF 1 : CE mark support control ON [CA] key: Exits the simulation mode. [INTERRUPT] key: Shifts to the sub code input window.	Default: 0: 100V series 1: 200V series

Main code	Sub code	Contents	Remark
26	31	**Auditor mode exclusive setup** Used to set whether paper feed is allowed from the manual paper feed tray of not when the auditor is set to the coin vendor mode. Sim26-31 AUDITOR 1:AUDITOR 1 [0-2] 1 Code: Setting 0 : Exclusive setting OFF (Manual paper feed enable) 1 : Exclusive setting ON (Manual paper feed disable) 2 : Exclusive setting OFF (Manual paper feed enable) + A3/WLT charge * When this setting is set to ON, if the auditor mode is the coin vendor mode and the standard tray setting is set to the manual paper feed tray, the standard tray setting is set to the main tray. [CA] key: Exits the simulation mode. [INTERRUPT] key: Shifts to the sub code input window.	Default: 1
	36	**Cancel of stop at maintenance life over** "Stop" or "Cancel of stop" can be selected when the maintenance counter reaches the life over. Sim26-36 MAINTESTOP 1:MAINTE OVER 1 [0-1] 1 Code: Setting 0 : Stop 1 : Cancel of stop [CA] key: Exits the simulation mode. [INTERRUPT] key: Shifts to the sub code entry menu.	Default: 1
	37	**Cancel of stop at developer life over** "Stop" or "Cancel of stop" can be selected when the developer counter reaches the life over.. Sim26-37 DEVE STOP 1:DEV LIFE OVER 1 [0 - 1] 1 Code: Setting 0 : Stop 1 : Cancel of stop [CA] key: Exits the simulation mode. [INTERRUPT] key: Shifts to the sub code entry menu.	Default: 1
	39	**Memory capacity check** Used to check the capacity of the image memory (SDRAM) installed to the MCU PWB and the capacity of the IMC compression memory. Sim26-39 MEMORY CHK MCU : 128Mbyte There are two kinds of the displayed image memory capacity: 16MB and 32MB. The standard capacity of the IMC compression memory is 16B. * It is not displayed when IMC is not installed. [CA] key: Exits the simulation mode. [INTERRUPT] key: Shifts to the sub code input window.	

Main code	Sub code	Contents	Remark
26	42	**Transfer ON/OFF timing control setting** Used to set the ON/OF timing of the transfer charger (TC) individually. Select an item to be changed with the arrow keys, and change the set value to a desired value, and press [OK] key or [START] key. The entered value is saved to the EEPROM and the machine shifts to the sub code input window. (Item selection) Sim26-42 TC TIMING 1:TC(ON) 38 2:TC(OFF) 50 [1- 99] 50 → (Value input) Sim26-42 TC TIMING 1:TC(ON) 38 2:TC(OFF) 50 [1- 99] 60 → (Settlement) Sim26-42 TC TIMING 1:TC(ON) 60 2:TC(OFF) 50 [1- 99] 60 ▲Key, ▼Key / Numeric Key / [OK] key or [START] Key Variation in the adjustment value •18cpm/20cpm machine	Default: 38 (TC ON) 50 (TC OFF)

1:TC(ON)			2:TC(OFF)		
PS release → TC ON			PIN OFF → TC OFF		
Set value	Time (ms)	Difference (ms)	Set value	Time (ms)	Difference (ms)
99	442	+122	99	402	+98
•••	•••	•••	•••	•••	•••
50	344	+24	51	306	+2
•••	•••	•••	50	304	0
38	320	0	49	302	-2
•••	•••	•••	•••	•••	•••
1	246	-74	1	206	-98

•23cpm machine

1:TC(ON)			2:TC(OFF)		
PS release → TC ON			PIN OFF → TC OFF		
Set value	Time (ms)	Difference (ms)	Set value	Time (ms)	Difference (ms)
99	367	101	99	334	82
•••	•••	•••	•••	•••	•••
50	286	20	51	254	2
•••	•••	•••	50	252	0
38	266	0	49	251	-1
•••	•••	•••	•••	•••	•••
1	204	-62	1	171	-81

* Setting range is 1 - 99.
In the case of 88mm/s, when the set value is increased by 1, the timing is increased by 2ms.
[CA] key: Exits the simulation mode.
[INTERRUPT] key: Shifts to the sub code input window.

	43	**Side void amount setting** Used to set the left and right side void amounts. The left side void amount and the right side void amount can be set individually. Select an item to be changed with the arrow keys and change the set value to a desired value. The setting range is 0-10. When the value is increased by 1, the void amount is increased by 0.5mm. The default is 5 (= 2.5mm). (Item selection) Sim26-43 SIDE VOID 1:SIDE VOID(L) 3 2:SIDE VOID(R) 3 [0- 10] 3 → (Value input) Sim26-43 SIDE VOID 1:SIDE VOID(L) 3 2:SIDE VOID(R) 3 [0- 10] 4 → (Settlement) Sim26-43 SIDE VOID 1:SIDE VOID(L) 4 2:SIDE VOID(R) 3 [0- 10] 4 ▲Key, ▼Key / Numeric Key / [OK] key or [START] Key Display: Set item 1:SIDE BOID(L) : Left side void amount setting 2:SIDE VOID(R) : Right side void amount setting [CA] key: Exits the simulation mode. [INTERRUPT] key: Shifts to the sub code input window.	Default: 5 (Void amount: 2.5mm)

Main code	Sub code	Contents	Remark
26	51	**Copy temporary stop function setting** Used to set whether copying is stopped temporarily when the paper exit tray full is detected. When the electronic sort function is used, paper exit of 250 sheets (*1) or more can be used for one copy job. If, at that time, copying (paper discharge) is continued with the tray full, a paper exit jam may occur. To avoid this, copying is temporarily stopped by this setting. Sim26-51 COPY STOP 1:COPIES STOP 0 0=NON STOP 1=STOP [0-1] 1 Display: Setting 0 : Temporary stop cancel 1 : Temporary stop (*1) 150 sheets when the job separator is installed. [CA] key: Exits the simulation mode. [INTERRUPT] key: Shifts to the sub code input window.	Default: 1
	54	**LCD contrast PWM duty setting** Used to set the PWM duty (brightness) at the center value of LCD contrast. * Setting range: 30-70 * When [OK] key or [START] key is pressed, the set value of LCD contrast is immediately reflected. Sim26-54 LCD DUTY 1:LCD PWM DUTY 50 [30- 70] 50 [CA] key: Exits the simulation mode. [INTERRUPT] key: Shifts to the sub code input window.	Default: 50
	56	**Life correction ON/OFF setting** The image correction ON/OFF setting is made according to the usage level (life) of developer. When this simulation is executed, the list of the modes and the current set value are displayed on the LCD. Select an item to be changed with the arrow keys, and change the set value to the required value. (1=ON [Enable], 0=OFF [Disable]) When [OK] key or [START] key is pressed, the setting is saved to the EEPROM. Sim26-56 LIFE SET 1:AE1 1 2:AE2 1 3:TEXT 1 1/3 [0- 1] 1 Sim26-56 LIFE SET 4:PHOTO 1 1 5:PHOTO 2 1 6:AE(TS)1 1 2/3 [0- 1] 1 Sim26-56 LIFE SET 7:AE(TS)2 1 8:TEXT(TS) 1 1 3/3 [0- 1] 1 Screen display : adjustment mode 1: AE1 : AE1 life correction 2: AE2 : AE2 life correction 3: TEXT : TEXT life correction 4: PHOTO 1 : PHOTO (Error diffusion) life correction Screen display : Adjustment mode 5:PHOTO 2 : PHOTO(Dither) life correction 6:AE(TS)1 : TSAE1 life correction 7:AE(TS)2 : TSAE2 life correction 8:TEXT(TS) : TSTEXT life correction [CA] key: Exits the simulation mode. [INTERRUPT] key: Shifts to the sub code input window.	Default: 1: 1 2: 1 3: 1 4: 1 5: 1 6: 1 7: 1 8: 1
	60	**[FAX] key Enable/Disable setting** Used to set Enable/Disable of the [FAX] key when the FAX PWB is not installed. Though this setting is set to Enable, if the FAX PWB is not installed, a message of "FAX PWB is not installed" is displayed. * When the FAX PWB is installed, the display shifts to the FAX window regardless of this setting. Sim26-60 FAX KEY 1:FAX KEY MODE 0 [0- 1] 0 [CA] key: Exits the simulation mode. [INTERRUPT] key: Shifts to the sub code input window.	Default: 0

	FAX PWB	
Setting	Yes	No
0 (Enable)	FAX window display	FAX not-installed display
1 (Disable)	FAX window display	Error beep sound

<table>
<tr><th>Main code</th><th>Sub code</th><th>Contents</th><th>Remark</th></tr>
<tr><td>26</td><td>69</td><td>
Toner near end environment setting (Function)
This simulasion is used to set the operating conditions for toner near end. The setting mode is switched by [Density select] key.
The set value of the selected mode is displayed on the LCD display.
When the code number is entered and [START] key is pressed, the setting is switched.
<Toner near end display /No display>
<table>
<tr><th>Code number</th><th>Setting contents</th></tr>
<tr><td>0</td><td>Toner near end is displayed</td></tr>
<tr><td>1</td><td>Toner near end is not displayed</td></tr>
</table>
<Setting of operations at toner end>
<table>
<tr><th>Code number</th><th>Setting contents</th></tr>
<tr><td>0</td><td>Operation setting 1</td></tr>
<tr><td>1</td><td>Operation setting 2</td></tr>
<tr><td>2</td><td>Operation setting 3</td></tr>
</table>
</td><td></td></tr>
<tr><td></td><td>73</td><td>
Toner save setting display/non-display

Used to set Enable/Disable of the toner save setting in the system settings. If this setting is set to Enable (1), the toner save setting appears in the system settings to allow setting.
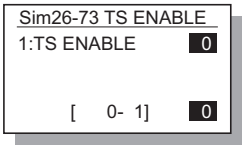

Display: Setting
0 : Disable
1 : Enable

[CA] key: Exits the simulation mode.
[INTERRUPT] key: Shifts to the sub code input window.
</td><td>Default:
1</td></tr>
<tr><td></td><td>74</td><td>
Total counter display change setting

Used to set whether the scanner counter value is added to the total counter display in the system settings.
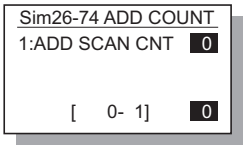

0 : Scan counter not added
1 : Scan counter added

[CA] key: Exits the simulation mode.
[INTERRUPT] key: Shifts to the sub code input window.
</td><td>Default:
0</td></tr>
<tr><td>30</td><td>01</td><td>
Paper sensor status display

Used to display the list of paper sensor status on the LCD. An active sensor is highlighted.
The display items and corresponding sensors are shown below.
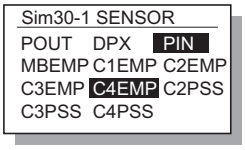

Display : Corresponding sensor
POUT : Paper exit sensor
DPX : DUPLEX sensor
PIN : Paper entry sensor
MBEMP : Manual feed paper sensor
C1EMP : No. 1 tray paper sensor
C2EMP : No. 2 tray paper sensor
C3EMP : No. 3 tray paper sensor
C4EMP : No. 4 tray paper sensor
C2PSS : No. 2 tray paper feed sensor
C3PSS : No. 3 tray paper feed sensor
C4PSS : No. 4 tray paper feed sensor

When a multi-stage cassette is not installed as an option, the corresponding sensor name is not displayed.
</td><td></td></tr>
</table>

Main code	Sub code	Contents	Remark
41	01	**Document size detection photo sensor check** Used to check the operation of the document sensor. When this simulation is executed, the status of the document sensor is displayed. An active sensor display is highlighted. Sim41-1 PD SENSOR OCSW PD1 PD2 PD3 PD4 PD5 OC cover open/close sensor status: OCSW — Open: Highlighted; Close: Normal display Document sensor status: PD1 - PD5 — Document NO: Normal display; Document YES: Highlighted * For AB series, PD1-PD5; for inch series, PD1 - PD4.	
	02	**Document size detection photo sensor detection level adjustment** When this simulation is executed, the detection level of the OC document size detection sensor is displayed. (Real time display) Place white paper of A3 or WLT on the document table and press [OK] key or [START] key with the OC cover open. When [START] key is pressed, "EXEC" is highlighted and the document detection level at that moment is saved in the EEPROM. (The saved value is used as the reference for the following document size detection control.) Execution window Sim41-2 PD SENSOR OCS 1[128] 200 2[128] 200 3[128] 200 4[128] 200 5[128] 200 Sensor position for AB series 5 4 1 2 3 Sensor position for Inch series 4 3 1 2 The values are displayed in the range of 0 - 255. 0 (Black) - 255 (White) The value in [ ] indicates the adjustment threshold value. "EXEC" is highlighted during execution. OCSW: Original cover status Open: Highlighted Close: Normal display 1 - 5: PD sensor detection level	
	03	**Document size detection photo sensor light receiving/detection level check** When this simulation is executed, the light receiving level of the document detection photo sensor is displayed. (Real time display) The values in parentheses of sensor 4 and 5 are the threshold values of adjustment at SIM41-04. Since sensors 1 and 3 are not provide with the threshold value of detection at SIM41-04, "0" is always displayed. Sim41-3 PD SENSOR OCS 1[000] 200 2[000] 200 3[000] 200 4[050] 200 5[050] 200	
	04	**Detection level adjustment when the document size is settled (15 degrees - 20 degrees)** Set the OC cover to the document size settled state (15 degrees - 20 degrees), and press [OK] key. ①Initial window Sim41-4 20°SENSOR PRESS OK KEY EXEC ②After-execution window Sim41-4 20˚SENSOR OCS 1[000] 163 2[000] 148 3[001] 167 4[0C6] 180 5[197] 179 The detection level under the document size settled state is saved in the EEPROM, and the value is displayed in [ ]. * The document size settled state means the point when the open/close sensor (OCSW) is switched from ON (highlighted) to OFF (normal display).	

Main code	Sub code	Contents	Remark
42	01	**Developing counter clear** Used to clear the developing counter. When this simulation is executed, the confirmation window is displayed to confirm to clear or not. To clear, press [OK] key or [START] key. Not to clear, press [INTERRUPT] key or [CA] key to exit the simulation mode. Sim42-1 COUNTER CLR DEVELOPER COUNTER CLEAR ARE YOU SURE? EXEC [CA] key: Exits the simulation mode. [INTERRUPT] key: Shifts to the sub code input window.	
43	01	**Fusing temperature setting 1** When this simulation is executed, the current set value is displayed. Every time when [▸] key is pressed, the current display value is increased. For the set value, refer to Table 1 and 2. Every time when [◂] key is pressed, the current display value is decreased. For the set value, refer to Table 1 and 2. Enter a desired set value (temperature), and press [OK] key or [START] key. The set value is caved in the EEPROM. Sim43-1 FUSER TMP 1 1:READY 170 2:NORMAL 165 3:THICK 180 170 Sim43-1 FUSER TMP 2 4:MOTORON 100 5:MOTOROFF 0 6:WEPEND 23 80 Window display / Setting item / Setting range 1: READY / Main thermistor target temperature during standby / 150 - 230 *1 2: NORMAL / Main thermistor target temperature during plain paper transmission *5 / 150 - 230 *2 3: THICK / Main thermistor target temperature during heavy paper transmission / 150 - 230 *3 4: MOTORON / Main thermistor temperature when starting main motor preliminary rotation / 80 - 160 *4 5: MOTOROFF / Main motor preliminary rotation end time (sec) / 0 - 90 6: WUPEND / Warm-up compulsory termination time (sec) / 0 - 90 *1: When the set value is increased by 1, the target temperature is increased by 5°C. (Refer to Table 1.) *2: When the set value is increased by 1, the target temperature is increased by 10°C. (Refer to Table 2.) *3: When the set value is increased by 1, the target temperature is increased by 5°C. (Refer to Table 1.) *4: When the set value is increased by 1, the target temperature is increased by 10°C. (Refer to Table 2.) *5: The correction temperature applied to the current target temperature differs depending on the paper size. For details, refer to SIM43-04. **Table 1:** NO. 0 1 2 3 4 5 6 7 8 9 10 11 12 13 14 15 16 Temperature (°C) 150 155 160 165 170 175 180 185 190 195 200 205 210 215 220 225 230 **Table 2:** NO. 0 1 2 3 4 5 6 7 8 Temperature (°C) 80 90 100 110 120 130 140 150 160 [CA] key: Exits the simulation mode. [INTERRUPT] key: Shifts to the sub code input window.	Default: READY: 170 NORMAL: 150 (18/20cpm machine) 165 (23cpm machine) THICK: 180 MOTORON: 100 MOTOROFF: 0 WUPEND: 23

Main code	Sub code	Contents	Remark
43	02	**Fusing temperature setting 2**	

When this simulation is executed, the current set value is displayed.
Every time when [▸] key is pressed, the current display value is increased. For the set value, refer to Table 1.
Every time when [◂] key is pressed, the current display value is decreased. For the set value, refer to Table 1.
Enter a desired set value (temperature), and press [OK] key or [START] key. The set value is caved in the EEPROM.

```
Sim43-2 FUSER TMP 2
1:SUSPEND      230
2:RESUME       180
3:COOLDOWN       0
               230
```

Window display	Setting item	Setting range	Default:
1: SUSPEND	Sub thermistor temperature when shifting to high temperature alarm	150 - 230 *1	SUSPEND: 230
2: RESUME	Sub thermistor temperature when canceling high temperature alarm	150 - 230 *2	RESUME: 180
3: COOLDOWN	Main motor rotation time (sec) after completion of a JOB	0 - 90	COOLDOWN: 0

*1, *2: When the set value is increased by 1, the target temperature is increased by 5°C. (Refer to Table 1.)

Table 1:

NO.	0	1	2	3	4	5	6	7	8	9	10	11	12	13	14	15	16
Temperature (°C)	150	155	160	165	170	175	180	185	190	195	200	205	210	215	220	225	230

[CA] key: Exits the simulation mode.
[INTERRUPT] key: Shifts to the sub code input window.

	03	**Fusing temperature setting 3**	

When this simulation is executed, the current set value is displayed.
Every time when [▸] key is pressed, the current display value is increased. For the set value, refer to Table 1 and 2.
Every time when [◂] key is pressed, the current display value is decreased. For the set value, refer to Table 1 and 2.
Enter a desired set value (temperature), and press [OK] key or [START] key. The set value is caved in the EEPROM.

```
Sim43-3 FUSER TMP 3
1:PREHEAT      110
2:WARMUP1      100
3:WARMUP2      150
               110
```

Window display	Setting item	Setting range	Default:
1: PREHEAT	Main thermistor target temperature during preliminary heating	80 - 160 *1	PREHEAT: 110
2: WARMUP1	When the initial temperature is below 120°C during warm-up Main thermistor target temperature	150 - 230 *2	WARMUP1: 160
3: WARMUP2	When the initial temperature is above 120°C during warm-up Main thermistor target temperature	150 - 230 *3	WARMUP2: 150

*1: When the set value is increased by 1, the target temperature is increased by 10°C. (Refer to Table 2.)
*2: When the set value is increased by 1, the target temperature is increased by 5°C. (Refer to Table 1.)
*3: When the set value is increased by 1, the target temperature is increased by 5°C. (Refer to Table 1.)

Table 1:

NO.	0	1	2	3	4	5	6	7	8	9	10	11	12	13	14	15	16
Temperature (°C)	150	155	160	165	170	175	180	185	190	195	200	205	210	215	220	225	230

Table 2:

NO.	0	1	2	3	4	5	6	7	8
Temperature (°C)	80	90	100	110	120	130	140	150	160

[CA] key: Exits the simulation mode.
[INTERRUPT] key: Shifts to the sub code input window.

Main code	Sub code	Contents	Remark
43	04	**Fusing temperature setting 4** When this simulation is executed, the current set value is displayed. Every time when [▸] key is pressed, the current display value is increased. For the set value, refer to Table 3. Every time when [◂] key is pressed, the current display value is decreased. For the set value, refer to Table 3. Enter a desired set value (temperature), and press [OK] key or [START] key. The set value is caved in the EEPROM. Sim43-4 FUSER TMP 4 1:TMPFIRST 5 2:TMPLAST -5 3:CNTFIRTS 3 5 Sim43-4 FUSER TMP 4 4:CNTTYPE1 50 5:CNTTYPE2 50 6:CNTTYPE3 25 50 Window display / Setting item / Setting range 1: TMPFIRST / JOB initial correction temperature *3 / -20 - 20 *1 2: TMPLAST / JOB latter-half correction temperature *4 / -20 - 20 *2 3: CNTFIRST / JOB initial temperature correction number of sheets / 0 - 255 4: CNTTYPE1 / JOB latter-half temperature correction number of sheets (Paper size: A3/WLT) / 0 - 255 5: CNTTYPE2 / JOB latter-half temperature correction number of sheets (Paper size: A4/LT) / 0 - 255 6: CNTTYPE3 / JOB latter-half temperature correction number of sheets (Paper size: except A3/WLT/A4/LT) / 0 - 255 *1, *2: When the set value is increased by 1, the target temperature is increased by 5°C. (Refer to Table 3.) *3: Correction temperature from starting a JOB to reaching the JOB initial temperature correction number of sheets *4: Correction temperature from the JOB initial temperature correction number of sheets to JOB end **Table 3:** NO. 0 1 2 3 4 5 6 7 8 Temperature (°C) -20 -15 -10 -5 0 5 10 15 20 [CA] key: Exits the simulation mode. [INTERRUPT] key: Shifts to the sub code input window.	Default: TMPFIRST: 5 TMPLAST: -5 CNTFIRST: 3 CNTTYPE1: 50 CNTTYPE2: 50 CNTTYPE3: 25
43	12	**Standby mode fusing fan rotation setting** When this simulation is executed, the currently set code number is displayed. Select a mode to be changed with the arrow keys and enter a set value with numeric keys. Enter the mode number to be selected with numeric keys and press [OK] key or [START] key. The set value is saved in the EEPROM. Sim43-12 FAN SPEED 1:LOW 0 2:HIGH 1 [0-1] 0 FAN rotation speed 0 : Low speed rotation 1 : High speed rotation Setting mode LOW / Setting in normal temperature adjustment (190°C or below) HIGH / When the fusing temperature is 190°C or above	Default: LOW:0 HIGH:1

Main code	Sub code	Contents	Remark
43	13	**Paper interval control allow/inhibit setting** Used to change the paper feed timing of 21st sheet or later to A3 or WLT (depending on the destination setting) when in multi copy/print of narrow width sheets. When this simulation is executed, the current set number is displayed. Enter a code number and press [START] key. The entered number is saved in the EEPROM and the machine returns to the sub code input window. Sim43-13 PICK INTVL 1:PICK INTVL 0 [0-1] 0 Code: Setting 0: Disable (Default) 1: Enable <Applicable paper> 1) Cassette paper feed: A4R,B5R,8-1/2"x14",8-1/2"x13",8-1/2"x11",A5,INV 2) Manual paper feed: A4R,B5R,8-1/2"x14",8-1/2"x13",8-1/2"x11",A5,INV,16KRÅ * A5 is applicable to manual paper fed only in EX Japan AB series.	Default: 0
44	01	**Enable/Disable setting of toner density control correction** Enable/Disable of toner density control correction is set. When this simulation is executed, the list of the modes and the current set value are displayed on the LCD. "Select an item to be changed with the cross key, and change the set value to the required value. (1=ON [Enable], 0=OFF [Disable])" When [OK] key or [START] key is pressed, the setting is saved to the EEPROM. Sim44-1 TONER CONT 1:COV 0 2:LIFE 0 3:DRIP 0 1/2 [0- 1] 0 Sim44-1 TONER CONT 4:BETA 0 5:UNCONDITIONAL 0 0 2/2 [0- 1] 0 Display mode : Setting mode COV : Print ratio correction LIFE : Life correction DRIP : Drip supply★ BETA : Purge process★ UNCONDITIONAL : Unconditional toner supply Display : Setting 0 : Disable 1 : Enable <Descriptions of each correction> Print ratio correction In this correction, the toner supply interval is determined according to the print ratio to prevent against over-toner. Note for corrections marked with ⋆ Since "Drip supply" and "Purge process" are simulations for analysis, do not set them to "1" [Enable]. If they are set to "1" [Enable], the toner density rises or falls abnormally and developer failure or toner dispersion occurs. If they are set to "1" [Enable] erroneously, developer must be replaced, and the inside of the machine and the process unit must be cleaned. Unconditional toner supply When the developing unit and the drum unit are rotating, a small quantity of toner is consumed. For assuring this operation, toner is supplied according to the rotation time of the developing unit.	Default: COV: 1 LIFE: 0 (18/20cpm machine) 1 (23cpm machine) DRIP: 0 BETA: 0 UNCONDITIONAL: 1
	16	**Toner density control data check and toner density correction quantity display** The output value of the ATC sensor is checked, and the toner density control correction quantity is displayed on the LCD. Sim44-16 TONER DISP 1:TONER DEN_LT nnn 2:TONER DEN_ST nnn Name :Display content TONER DEN_LT :Current ATC sensor value TONER DEN_ST :ATC reference value with life correction quantity added [CA] key: Exits the simulation mode. [INTERRUPT] key: Shifts to the sub code input window.	

Main code	Sub code	Contents	Remark
44	34	**Transfer current setting** Used to set the transfer current value. When this simulation is executed, the list of modes and the current set value are displayed on the LCD. Sim44-34 TC ADJ. 1:NML F 22 2:NML R 21 3:SML F 22 1/2 [9- 36] 22 Sim44-34 TC ADJ. 4:SML R 21 5:BYPASS 22 2/2 [9- 36] 22 Select a set item with the arrow keys and enter a set value with numeric keys. Press [OK] key or [START] key, and the set value is saved in the EEPROM. The setting range is 90µA - 360µA. The calculation formula is "Set value x 10 (µA)." For example, in order to set the transfer current value to 200µA, set the adjustment value to "20." Display mode : Setting mode NML F : Normal size paper (Front) NML R : Normal size paper (Back) SML F : Small size paper (Front) SML R : Small size paper (Back) BYPASS : Manual paper pass * Small size paper means A4R (Letter R) width or less. * When selecting the special size of tray, the normal size width setting is made.	Default: NML F: 22 NML R: 21 SML F: 22 SML R: 21 BYPASS: 22
46	02	**Copy density adjustment (600dpi)** Used to set the copy density for each mode. Sim46-2 EXP. LEVEL 1:AE 50 2:TEXT 50 3:PHOTO 1 50 1/2 [1- 99] 50 Sim46-2 EXP. LEVEL 4:PHOTO 2 50 5:TEXT(TS) 50 6:AE(TS) 50 2/2 [1- 99] 50 Window display : Adjustment mode 1:AE : AE MODE (600dpi) 2:TEXT : TEXT MODE (300dpi) 3:PHOTO 1 : PHOTO MODE (Error diffusion) 4:PHOTO 2 : PHOTO MODE (Dither) 5:TEXT (TS) : TS MODE (TEXT) (600dpi) 6:AE (TS) : TS MODE (AE) (600dpi) Used to set the copy density for each mode. When this simulation is executed, the list of the setting items and the current set value are displayed. Select an item to be changed with [▲] key and [▼] key and enter the adjustment value with numeric keys. The setting range is 1 - 99. When [◄] key or [►] key is pressed, the page is changed. Enter the adjustment value with numeric keys and press [OK] key. The entered value is saved in the EEPROM and the machine shifts to the copy window. Sample copying can be performed during the simulation.	

Main code	Sub code	Contents	Remark
46	10	**Copy exposure level adjustment, individual setting (Text) 600dpi** Used to adjust the shift amount and the slanting value for each density level (1-5) when the exposure model is TEXT (including TS). • For the shift amount, the gamma (gradation) is common. The whole sections are made brighter or darker. When the shift amount is increased, the brightness is decreased. When the shift amount is decreased, the brightness is increased. • The slanting value changes the gamma (gradation). When the set value is increased, the gamma is increased to provide a higher contrast. (Clear black and white) When the set value is decreased, the gamma is decreased to provide a lower contrast. (Higher gradation) Select an adjustment mode with the arrow keys, and enter the set value with numeric keys. The adjustment range is 1 - 99. When [◂] key or [▸] key is pressed, the page is changed. The shift amount and the slanting value can be individually set for each of five levels of density for each of TEXT/TS and TEXT. Therefore, there are 20 patterns of adjustment modes. Sim46-10 TEXT 600 1:1.0(SHIFT) 50 2:1.0(GAMMA) 50 3:2.0(SHIFT) 50 1/7 [1- 99] 50 Sim46-10 TEXT 600 4:2.0(GAMMA) 50 5:3.0(SHIFT) 50 6:3.0(GAMMA) 50 2/7 [1- 99] 50 Sim46-10 TEXT 600 7:4.0(SHIFT) 50 8:4.0(GAMMA) 50 9:5.0(SHIFT) 50 3/7 [1- 99] 50 Sim46-10 TEXT 600 10:5.0(GAMMA) 50 11:TS 1.0(SHIFT) 50 12:TS 1.0(GAMMA) 50 4/7 [1- 99] 50 Sim46-10 TEXT 600 13:TS 2.0(SHIFT) 50 14:TS 2.0(GAMMA) 50 15:TS 3.0(SHIFT) 50 5/7 [1- 99] 50 Sim46-10 TEXT 600 16:TS 3.0(GAMMA) 50 17:TS 4.0(SHIFT) 50 18:TS 4.0(GAMMA) 50 6/7 [1- 99] 50 Sim46-10 TEXT 600 19:TS 5.0(SHIFT) 50 20:TS 5.0(GAMMA) 50 7/7 [1- 99] 50 1 | 1.0(SHIFT) | TEXT density 1 shift amount 2 | 1.0(GAMMA) | TEXT density 1 gamma value 3 | 2.0(SHIFT) | TEXT density 2 shift amount 4 | 2.0(GAMMA) | TEXT density 2 gamma value 5 | 3.0(SHIFT) | TEXT density 3 shift amount 6 | 3.0(GAMMA) | TEXT density 3 gamma value 7 | 4.0(SHIFT) | TEXT density 4 shift amount 8 | 4.0(GAMMA) | TEXT density 4 gamma value 9 | 5.0(SHIFT) | TEXT density 5 shift amount 10 | 5.0(GAMMA) | TEXT density 5 gamma value 11 | TS 1.0(SHIFT) | TS TEXT density 1 shift amount 12 | TS 1.0(GAMMA) | TS TEXT density 1 gamma value 13 | TS 2.0(SHIFT) | TS TEXT density 2 shift amount 14 | TS 2.0(GAMMA) | TS TEXT density 2 gamma value 15 | TS 3.0(SHIFT) | TS TEXT density 3 shift amount 16 | TS 3.0(GAMMA) | TS TEXT density 3 gamma value 17 | TS 4.0(SHIFT) | TS TEXT density 4 shift amount 18 | TS 4.0(GAMMA) | TS TEXT density 4 gamma value 19 | TS 5.0(SHIFT) | TS TEXT density 5 shift amount 20 | TS 5.0(GAMMA) | TS TEXT density 5 gamma value Select an item to be changed and set a desired adjustment value. Press [OK] key, and the machine shifts to the copy window. When [START] key is pressed at that time, copying is performed with the previous adjustment value and the result can be checked.	The value on the example (50) is not the default value.

Main code	Sub code	Contents	Remark
46	11	**Copy exposure level adjustment, individual setting (Photo) 600dpi** Used to adjust the shift amount and the slanting value for each density level (1-5) when the exposure model is PHOTO (error diffusion and dither). • For the shift amount, the gamma (gradation) is common. The whole sections are made brighter or darker. When the shift amount is increased, the brightness is decreased. When the shift amount is decreased, the brightness is increased. • The slanting value changes the gamma (gradation). When the set value is increased, the gamma is increased to provide a higher contrast. (Clear black and white) When the set value is decreased, the gamma is decreased to provide a lower contrast. (Higher gradation) Select an adjustment mode with the arrow keys, and enter the set value with numeric keys. The adjustment range is 1 - 99. When [◂] key or [▸] key is pressed, the page is changed. The shift amount and the slanting value can be individually set for each of five levels of density for each of PHOTO mode (error diffusion and dither). Therefore, there are 20 patterns of adjustment modes.	The value on the example (50) is not the default value.

1	ED 1.0(SHIFT)	PHOTO (Error diffusion) density 1 shift amount
2	1.0(GAMMA)	PHOTO (Error diffusion) density 1 gamma value
3	ED 2.0(SHIFT)	PHOTO (Error diffusion) density 2 shift amount
4	ED 2.0(GAMMA)	PHOTO (Error diffusion) density 2 gamma value
5	ED 3.0(SHIFT)	PHOTO (Error diffusion) density 3 shift amount
6	ED 3.0(GAMMA)	PHOTO (Error diffusion) density 3 gamma value
7	ED 4.0(SHIFT)	PHOTO (Error diffusion) density 4 shift amount
8	ED 4.0(GAMMA)	PHOTO (Error diffusion) density 4 gamma value
9	ED 5.0(SHIFT)	PHOTO (Error diffusion) density 5 shift amount
10	ED 5.0(GAMMA)	PHOTO (Error diffusion) density 5 gamma value
11	DI 1.0(SHIFT)	PHOTO (Dither) density 1 shift amount
12	DI 1.0(GAMMA)	PHOTO (Dither) density 1 gamma value
13	DI 2.0(SHIFT)	PHOTO (Dither) density 2 shift amount
14	DI 2.0(GAMMA)	PHOTO (Dither) density 2 gamma value
15	DI 3.0(SHIFT)	PHOTO (Dither) density 3 shift amount
16	DI 3.0(GAMMA)	PHOTO (Dither) density 3 gamma value
17	DI 4.0(SHIFT)	PHOTO (Dither) density 4 shift amount
18	DI 4.0(GAMMA)	PHOTO (Dither) density 4 gamma value
19	DI 5.0(SHIFT)	PHOTO (Dither) density 5 shift amount
20	DI 5.0(GAMMA)	HOTO (Dither) density 5 gamma value

```
Sim46-11 PHOTO 600
1:ED 1.0(SHIFT)    50
2:ED 1.0(GAMMA)    50
3:ED 2.0(SHIFT)    50
1/7   [   1- 99]   50
```

```
Sim46-11 PHOTO 600
4:ED 2.0(GAMMA)    50
5:ED 3.0(SHIFT)    50
6:ED 3.0(GAMMA)    50
2/7   [   1- 99]   50
```

```
Sim46-11 PHOTO 600
7:ED 4.0(SHIFT)    50
8:ED 4.0(GAMMA)    50
9:ED 5.0(SHIFT)    50
3/7   [   1- 99]   50
```

```
Sim46-11 PHOTO 600
10:ED 5.0(GAMMA)   50
11:DI 1.0(SHIFT)   50
12:DI 1.0(GAMMA)   50
4/7   [   1- 99]   50
```

```
Sim46-11 PHOTO 600
13:DI 2.0(SHIFT)   50
14:DI 2.0(GAMMA)   50
15:DI 3.0(SHIFT)   50
5/7   [   1- 99]   50
```

```
Sim46-11 PHOTO 600
16:DI 3.0(GAMMA)   50
17:DI 4.0(SHIFT)   50
18:DI 4.0(GAMMA)   50
6/7   [   1- 99]   50
```

```
Sim46-11 PHOTO 600
19:DI 5.0(SHIFT)   50
20:DI 5.0(GAMMA)   50

7/7   [   1- 99]   50
```

Select an item to be changed and set a desired adjustment value. Press [OK] key, and the machine shifts to the copy window.
When [START] key is pressed at that time, copying is performed with the previous adjustment value and the result can be checked.

Main code	Sub code	Contents	Remark
46	12	**Density adjustment in the FAX mode (Collective adjustments)** Used to adjust the density in the FAX mode to "AUTO" or "0" - "99". 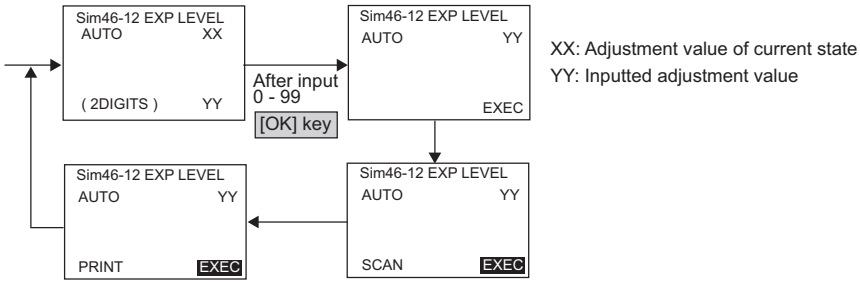 	
	13-16	**Density adjustment in the FAX mode (Individual adjustments)** Used to adjust the density in the FAX mode to "AUTO" or "0" - "99". 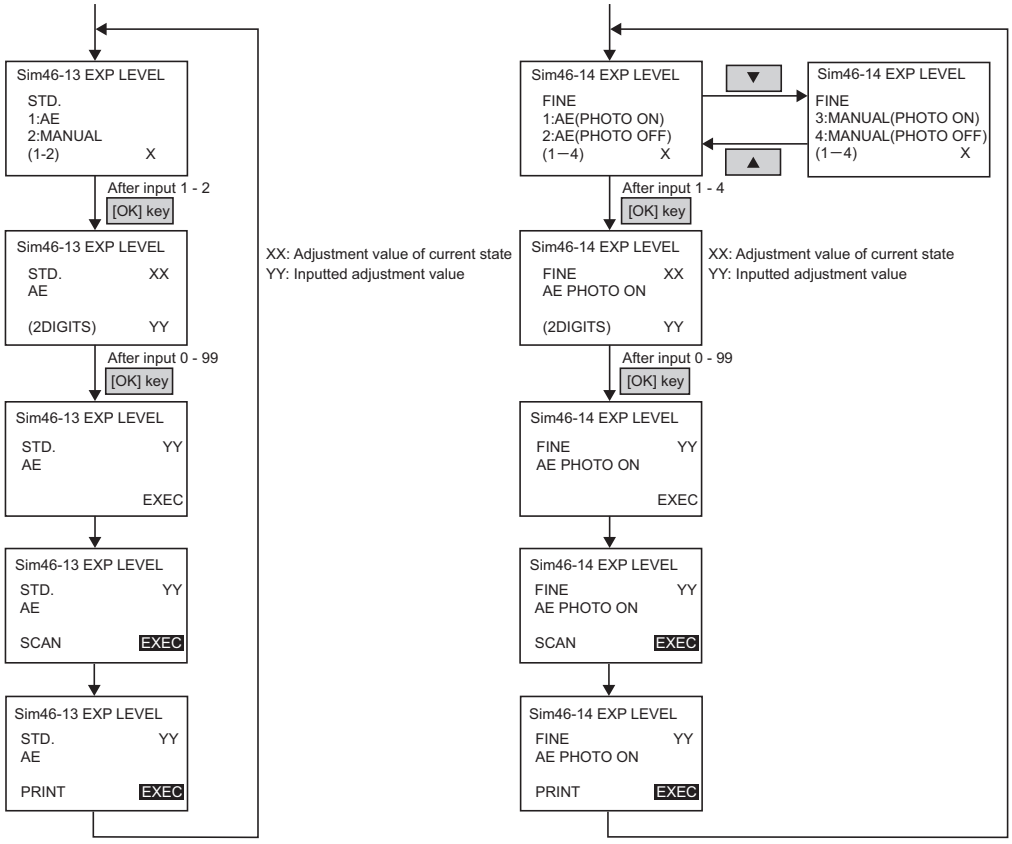 	

Main code	Sub code	Contents	Remark
46	13-16	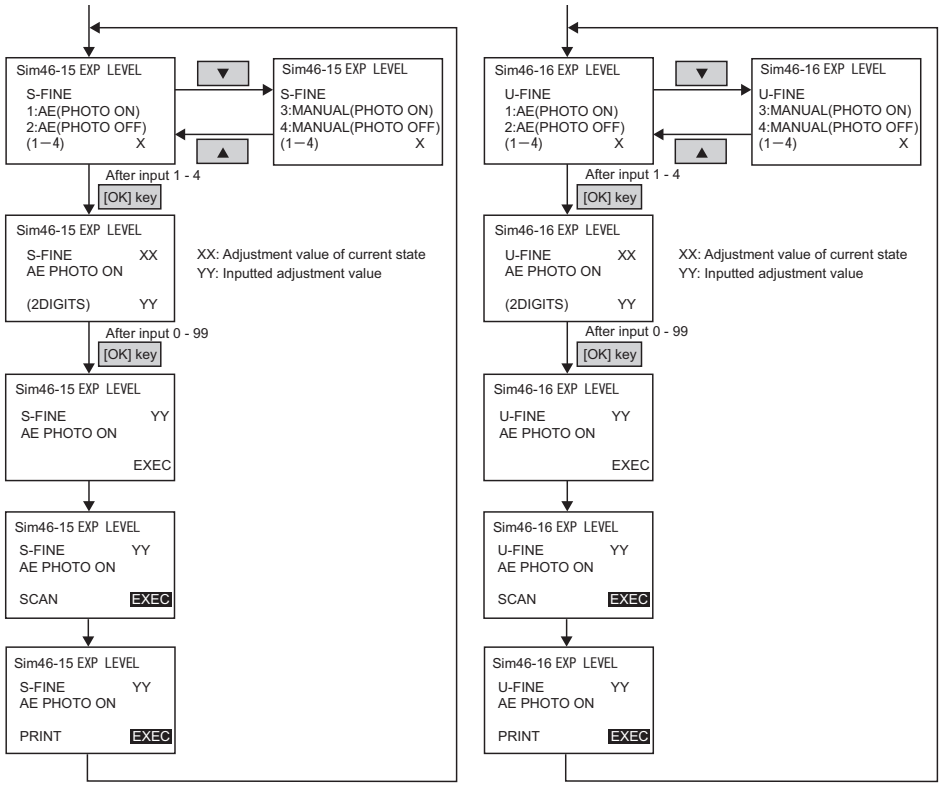	
	19	**Exposure mode setting (γ table setting/AE operation mode setting/Photo image process setting)** Used to set the following three items. Select an item with the [▲] key or [▼] key and enter a set value with numeric keys. (1) : γ table setting (2) : AE operation mode (3) : PHOTO image process setting When this simulation is executed, the current set code number of the above three modes are displayed. Sim46-19 AE MODE 1:AE MODE 1 2:AE STOP 0 3:PHOTO 1 [1- 2] 1 (1) AE MODE(γ table setting) Used to set the priority operation mode of the AE mode. When the image takes priority regardless of the toner consumption, set to 1. When the toner consumption must be suppressed regardless of image quality, set to 2. Code number: γ table setting 1: Priority on image quality 2: Priority on toner consumption * If this setting is changed, SIM 46-30 returns to the default. (2) AE STOP (AE operation mode) Used to set the area for automatic exposure correction in image process. Code number: AE operation mode 0: Lead edge stop 1: Real time process (All areas) (3) PHOTO (PHOTO image process setting) Used to set the image process when the PHOTO mode is selected. Selection is available in the following two modes: Code number: Image process mode 1: Error diffusion process 2: Dither process	Default: 2 Default: 0 Default: 2

Main code	Sub code	Contents	Remark
46	20	**SPF/RSPF exposure correction** Used to set the exposure correction amount in the SPF/RSPF mode. (Since a slightly darker image is outputted in the SPF/RSPF mode compares to the OC mode, the difference from the OC mode is corrected with this simulation. When, therefore, the exposure in the OC mode is corrected, the SPF/RSPF exposure is also changed accordingly.) Enter a correction value with numeric keys and press [OK] key. The adjustment value is saved in the EEPROM and the machine shifts to the adjustment copy window. Since this simulation is used to make up for the exposure difference from the OC mode regardless of the exposure mode, the adjustment is fixed to TEXT mode and the exposure mode cannot be changed. After completion of copying for check, the machine returns to the setting window. 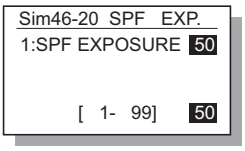 The adjustment value is in the range of 1 - 99. Adjustment value (Image change) 99 (Dark) • • • 50 (Default) • • • 1 (Light)	(Only when the SPF/RSPF is installed.) Default: 50
	29	**Image contrast adjustment (600dpi)** Used to adjust the image contrast for each mode. When this simulation is executed, the current set value of each mode is displayed in two digits. (Default: 50) (Adjustment item selection window) 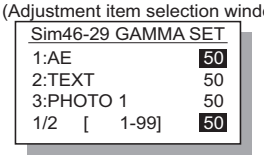 (Copy start window) 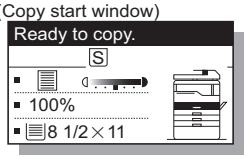 (Copy execution window) 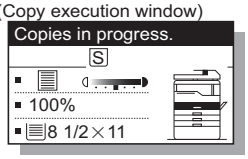 Display text — Copy mode 1:AE — AE mode (600dpi) 2:TEXT — TEXT mode (600dpi) 3:PHOTO 1 — PHOTO mode (Error diffusion) 4:PHOTO 2 — PHOTO mode (Dither) 5:TEXT (TS) — TONER SAVE mode (TEXT)(600dpi) 6:AE (TS) — TONER SAVE mode (AE)(600dpi) Select an adjustment item (mode) with the arrow keys and enter a desired value with numeric keys. When [OK] key is pressed, the entered value is saved to the EEPROM and the machine shifts to the copy execution window. After completion of copying, the machine returns to the adjustment value input window. When [START] key is pressed instead of [OK] key, the machine shifts to the copy execution window and performs copying. 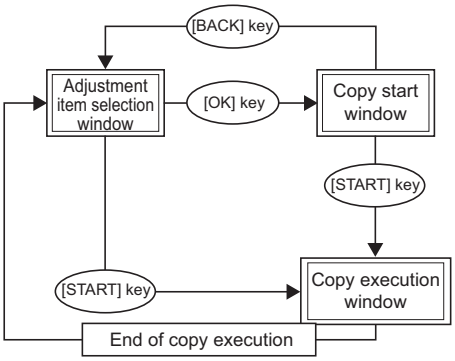 	Default: AE: 50 TEXT: 50 PHOTO1: 50 PHOTO2: 50 TEXT (TS): 50 AE (TS): 50

Main code	Sub code	Contents	Remark
46	30	**AE limit setting** Used to set the limit value in AE and AE (toner save) mode. When this simulation is executed, the selection window of the adjustment items and the current set value are displayed. (Adjustment item selection window) Sim46-30 AE LIMIT 1:AE 0 2:AE(TS) 0 [0- 255] 0 Window display : Mode 1: AE : AE limit value 2: AE (TS) : AE (Toner save) limit value Select an item to be changed with [▲] key and [▼] key and enter a desired value with numeric keys. The entered value is saved to the EEPROM. The adjustment value is in the range of 0 - 255. * Note: When SIM26 - 06 (Destination setting) and SIM46 - 19 (Auto exposure mode) are changed, this setting returns to the default accordingly.	Default: 196
	31	**Image sharpness adjustment** Used to adjust sharpening/shading of image for each mode. When this simulation is executed, the selection window of the adjustment items and the current set value are displayed. (Adjustment item selection window) Sim46-31 SHARPNESS 1:AE 1 2:TEXT 1 3:PHOTO 1 1 1/2 [0- 2] 1 Sim46-31 SHARPNESS 4:PHOTO 2 1 5:TEXT(TS) 1 6:AE(TS) 1 2/2 [0- 2] 1 Display text — Copy mode 1:AE — AE mode 2:TEXT — TEXT mode 3:PHOTO 1 — PHOTO mode (Error diffusion) 4:PHOTO 2 — PHOTO mode (Dither) 5:TEXT (TS) — TONER SAVE mode 6:AE (TS) — TONER SAVE mode Set value / Image quality 0 — Shading 1 — Standard 2 — Sharpening The adjustment range is in the range of 0 - 2. Select an adjustment item (mode) with the arrow keys and enter a desired value with numeric keys. When [OK] key is pressed, the entered value is saved to the EEPROM and the machine shifts to the copy execution window. After completion of copying, the machine returns to the adjustment value input window. When [START] key is pressed instead of [OK] key, the machine shifts to the copy execution window and performs copying. (Copy start window) Ready to copy. S 100% 8 1/2×11 (Copy execution window) Copies in progress. S 100% 8 1/2×11 [BACK] key Adjustment item selection window [OK] key Copy start window [START] key [START] key Copy execution window End of copy execution	Default: AE: 1 TEXT: 1 PHOTO1: 1 PHOTO2: 1 TEXT (TS): 1 AE (TS): 1

Main code	Sub code	Contents	Remark
46	39	**FAX IMAGE adjustment** Used to adjust the resolution and the filer in the FAX mode. 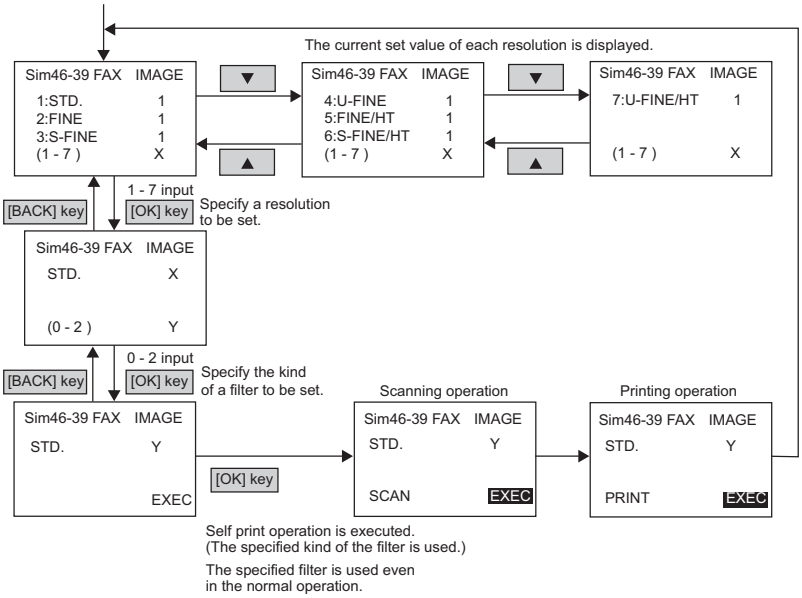 * When "Interrupt" key is pressed on a window other than the operation window, the display shifts to the sub code input window.	
48	01	**Main/sub scanning magnification ratio adjustment** Used to adjust the magnification ratio in the main scanning (front/rear) direction and the sub scanning direction. When this simulation is executed, the selection window of the adjustment items and the current set value are displayed (Adjustment item selection window) 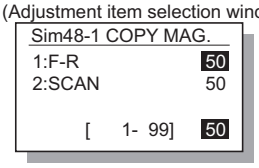 Display text array : Adjustment mode 1: F-R : Main scan direction magnification ratio (OC/SPF/RSPF) 2: SCAN : Sub scan direction magnification ratio (OC) The adjustment value is in the range of 1 - 99. When the adjustment value is increased by 1, the ratio is increased by 0.1%. Select an adjustment item (mode) with the arrow keys and enter a desired value with numeric keys. When [OK] key is pressed, the entered value is saved to the EEPROM and the machine shifts to the copy execution window. After completion of copying, the machine returns to the adjustment value input window. When [START] key is pressed instead of [OK] key, the machine shifts to the copy execution window and performs copying. (Copy start window) 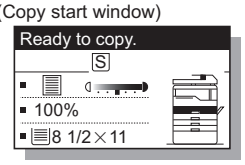 (Copy execution window) 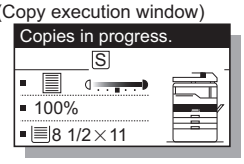 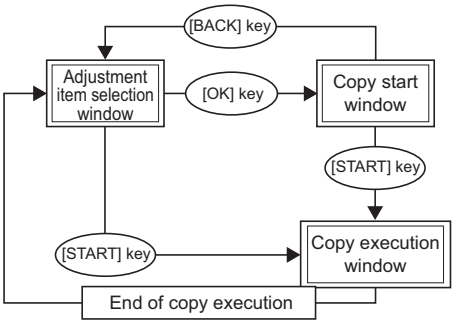 	Default: F-R: 50 SCAN: 50

Main code	Sub code	Contents	Remark
48	05	**SPF/RSPF mode sub scanning magnification ratio adjustment in copying** Used to adjust the sub scanning magnification ratio in the SPF/RSPF mode. When this simulation is executed, the selection window of the adjustment items and the current set value are displayed. (Adjustment item selection window) Sim48-5 (R)SPF ZOOM 1:RSPF(SIDE1) 50 2:RSPF(SIDE2) 50 [1- 99] 50 Display text array : Adjustment mode 1: RSPF (SIDE1) : SPF/RSPF sub scan direction magnification ratio adjustment on the front of document 2: RSPF (SIDE2) : RSPF sub scan direction magnification ratio setting on the back of document The adjustment value is in the range of 1 - 99. When the adjustment value is increased by 1, the ratio is increased by 0.1%. Select an adjustment item (mode) with the arrow keys and enter a desired value with numeric keys. When [OK] key is pressed, the entered value is saved to the EEPROM and the machine shifts to the copy execution window. After completion of copying, the machine returns to the adjustment value input window. When [START] key is pressed instead of [OK] key, the machine shifts to the copy execution window and performs copying. To adjust the sub scanning magnification ratio on the back of the document, shift the window to the copy start window and select "Duplex → Simplex" or "Duplex → Duplex" mode with the [DUPLEX] key. (Copy start window) Ready to copy. S 100% 8 1/2×11 (Copy execution window) Copies in progress. S 100% 8 1/2×11 [BACK] key Adjustment item selection window [OK] key Copy start window [START] key [START] key Copy execution window End of copy execution * The exposure mode is fixed to "TEXT" with density 3, and cannot be changed. * For the model without RSPF, the adjustment item of document back is not displayed.	(Only when the SPF/RSPF is installed.) Default: RSPF(SIDE1): 50 RSPF(SIDE2): 50
	08	**FAX magnification ratio adjustment (scan)** Used to adjust and set the FAX document scan magnification ratio and scan and print the document. Sim48-8 SCAN RATIO 1:OC 2:SPF 3:RSPF (1 - 3) X After input 1 - 3 [OK] key Sim48-8 SCAN RATIO OC 1:MAIN SCAN XXX 2:SUB SCAN XXX (1 - 2) After input 1 - 2 [OK] key Sim48-8 SCAN RATIO MAIN SCANNING/OC XXX (1 - 255) YYY After input 1 - 255 [OK] key XX: Adjustment value of current state YY: Inputted adjustment value Sim48-8 SCAN RATIO MAIN SCANNING/OC XXX PRINT EXEC Sim48-8 SCAN RATIO MAIN SCANNING/OC XXX SCAN EXEC Sim48-8 SCAN RATIO MAIN SCANNING/OC XXX EXEC	
	09	**FAX magnification ratio adjustment (print)** Used to adjust and set the FAX print magnification ratio and scan and print the document. Sim48-9 PRI. RATIO 1:MAIN SCAN XXX 2:SUB SCAN XXX 3:MAIN SCAN/R XXX (1 - 4) Sim48-9 PRI. RATIO 4:SUB SCAN/R XXX (1 - 4) Sim48-9 PRI. RATIO MAIN SCAN XXX PRINT EXEC After input 1 - 4 [OK] key XX: Adjustment value of current state YY: Inputted adjustment value Sim48-9 PRI. RATIO MAIN SCAN XXX (1 - 255) YYY After input 1 - 255 [OK] key Sim48-9 PRI. RATIO MAIN SCAN XXX EXEC Sim48-9 PRI. RATIO MAIN SCAN XXX SCAN EXEC	

Main code	Sub code	Contents	Remark
49	01	**Flash Rom program writing mode (MCU)**	

Used to download the programs and data sections of the main unit MCU board, the FAX board, and the operation panel.
When this simulation is executed, the machine immediately shifts to the download mode and the following display is shown.

(When entering the download mode)

Download Mode.

Connect the main unit and the download PC with a USB cable, and start downloading with the maintenance tool.
When downloading is started, the display is changed as follows:

(Receiving download data)

Download Data
Receiving.

(Processing download data)

Do not turn the
power off.

(When downloading is completed)

Processing finished.
Turn off the power.

(When an error occurs)

△Error.
MCU : --
FAX : --
PNL : --

* Contents during processing the download data
- FLASH ROM data erase
- Writing the received data into the FLASH
- Sum check

Used to display an error code at the error position in downloading of MCU/FAX/PANEL.
The error codes to be displayed are shown below.

	MCU	PANEL
0xFF	No process	No process
0x00	OK	OK
0x03	Data receive error (Protocol error 2)	Flash Rom write error (Program section)
0x04	Loader transfer error	Flash Rom write error (Common window data)
0x05	Flash Rom delete error (Boot)	Flash Rom write error (Copy window data)
0x06	Flash Rom delete error (Program)	Flash Rom write error (Scan window data)
0x07	Flash Rom write error (Boot)	Flash Rom write error (Print window data)
0x08	Flash Rom write error (Program)	Flash Rom write error (Fax window data)
0x09	Flash Rom LOCK error (Boot)	
0x0A	Flash Rom LOCK error (Program)	Data writing start address illegal error
0x0B	Sum check error (Loader)	FROM size error
0x0C	Sum check error (Boot)	Destination error
0x0D	Sum check error (Program)	Download file structure error
0x0E	Sum check error (EEPROM)	
0x0F	EEPROM read error	
0x10	EEPROM write error	Sum check error (Boot not-written)
0x11	EEPROM verify error	Sum check error (Loader)
0x12	Download data length error	Sum check error (After Boot writing)
0x17		Sum check error (Print window data)
0x18		Sum check error (Fax window data)
0x19	FAX communication error	Panel-MCU communication error
0x1A	PANEL communication error	
0x1B	Download file error	

Main code	Sub code	Contents	Remark
49	01		

FAX			
0xFF	No process	0x44	FONT Flash write error
0x00	OK	0x45	FONT Flash sum check error
0x01	Download impossible	0x52	Registration data work sum check error
0x02	Total data size error	0x56	Registration data format error
0x03	LOADER no file	0x57	Registration data items insufficient error
0x04	DWLD no file	0x58	Registration data items overlap error
0x05	BOOT no file	0x61	BOOT data size error
0x06	MAIN no file	0x62	BOOT work sum check error
0x07	FONT download impossible	0x63	BOOT Flash erase error
0x08	Option FLASH connection error	0x64	BOOT Flash write error
0x09	Option FLASH no match	0x65	BOOT Flash sum check error
0x11	LOADER data size error	0x71	MAIN data size error
0x12	LOADER work sum check error	0x72	MAIN work sum check error
0x21	BOOT data size error	0x73	MAIN Flash erase error
0x22	BOOT work sum check error	0x74	MAIN Flash write error
0x23	BOOT Flash erase error	0x75	MAIN Flash sum check error
0x24	BOOT Flash write error	0x81	FONT data size error
0x25	BOOT Flash sum check error	0x82	FONT work sum check error
0x31	MAIN data size error	0x83	FONT Flash erase error
0x32	MAIN work sum check error	0x84	FONT Flash write error
0x33	MAIN Flash erase error	0x85	FONT Flash sum check error
0x34	MAIN Flash write error	0x91	DWLD data size error
0x35	MAIN Flash sum check error	0x92	DWLD work sum check error
0x41	FONT data size error	0x93	DWLD Flash erase error
0x42	FONT work sum check error	0x94	DWLD Flash write error
0x43	FONT Flash erase error	0x95	DWLD Flash sum check error

02

Flash Rom program writing mode (NNB)

Used to write the program into NNB by using USB memory.

(Preliminary arrangement)
1. Save the NNB download file to the root directory of the USB memory.
2. Insert the USB memory into the USB port of the NNB board.

When this simulation is executed, the machine immediately shifts to the download mode and the following display is shown.

(When entering the download mode)

Downloaded Mode.

(When downloading is completed)

Processing finished.
Turn off the power.

(Processing download data)

Do not turn the
power off.

(When an error occurs)

! Error.
MCU :
NNB : 0D
FAX :

* Contents during processing the download data
- FLASH ROM data erase
- Writing the received data into the FLASH
- Sum check

Note: The operations are enabled only when the MX-NB12 is active.
It takes 30 seconds for the MX-NB12 from turning ON the power to activating. When turning ON the power, therefore, wait for 30 seconds before executing SIM49-02.
Once the process is started, never disconnect the USB memory until the end of the process.
It is allowed to save only one NNB download file (*.bm file) in the root directory of the USB memory.

Main code	Sub code	Contents	Remark
50	01	**Image lead edge adjustment** Used to adjust the following items related to the lead edge adjustment. 1.Print start position (Offset between output image and paper → Adjusted for each tray.) 2.Image lead edge void (Margin on the output image lead edge) 3.Document scanning start position (Image scanning start position in the sub scanning direction) When this simulation is executed, the selection window of the adjustment items and the set value are displayed. (Adjustment item selection window) Sim50-1 LEAD EDGE 1:TRAY1 50 2:TRAY2 50 3:MFT 50 1/2 [1- 99] 50 Sim50-1 LEAD EDGE 4:DEN-A 50 5:RRC-A 50 6:DEN-B 50 2/2 [1- 99] 50 Display text :Adjustment mode 1:TRAY1 :Print start position (TRAY1) 2:TRAY2 (*) :Print start position (TRAY2 - TRAY4) 3:MFT :Print start position (MULTI BYPASS) 4:DEN-A :Image lead edge void amount 5:RRC-A :Document scanning start position 6:DEN-B :Image rear edge void amount Note 1: Items marked with (*) are displayed when TRAY2 and following options are not installed. Note 2: When executing an adjustment copy from the manual paper feed tray, set the following paper. AB series → A3 paper Inch series → Double Letter paper Note 3: When the adjustment value of the print start position adjustment is increased by 1, the ON timing of the resist roller is delayed and the print result is shifted to the lead edge by 0.1mm. Note 4: When the adjustment value of the image scanning start position is increased by 1, the scanning start position is shifted to the home position by about 0.1mm, increasing the image loss amount. Note 5: When the print start position (TRAY1) is changed, the print start positions (TRAY2 - TRAY4) and the print start position (MULTI BYPASS) are also changed accordingly. The adjustment value is in the range of 1 - 99. Select an adjustment item (mode) with the arrow keys, and enter the set value with numeric keys. When [OK] key is pressed, the entered value is saved to the EEPROM and the machine shifts to the copy execution window. After completion of copying, the machine returns to the adjustment value input window. When [START] key is pressed instead of [OK] key, the machine shifts to the copy execution window and performs copying. (Copy start window) Ready to copy. S 100% 8 1/2×11 (Copy execution window) Copies in progress. S 100% 8 1/2×11 [BACK] key Adjustment item selection window [OK] key Copy start window [START] key [START] key Copy execution window End of copy execution	Default: TRAY1: 50 TRAY2: 50 MFT: 50 DEN-A: 50 RRC-A: 50 DEN-B: 50

Main code	Sub code	Contents	Remark
50	01	(Adjustment procedure) (1) Set the print start position (1: TRAY1), the lead edge void amount (4: DEN - A), and the scanning start position (5: RRC - A) to "1" and make a copy of 100%. (2) Measure the image loss amount (R mm) of the scale. Set [5:RRC - A] = 10xR(mm). (Example. Set 40.) When the value of [5: RRC - A] is increased by 10, the image loss is decreased by1mm. (3) Measure the distance (H mm) from the paper lead edge to the image print start position. Set [1:TRAY1] = 10xH(mm). (Example: Set 50.) When the value of [1:TRAY1] is increased by 10, the image lead edge shifts to the paper lead edge by 1mm. (4) Set the lead edge void amount to B = 50(2.5mm). When the value of [4:DEN - A] is increased by 10, the void amount is increased by about 1mm. (For 25 or less, the void amount is zero.) [Example] 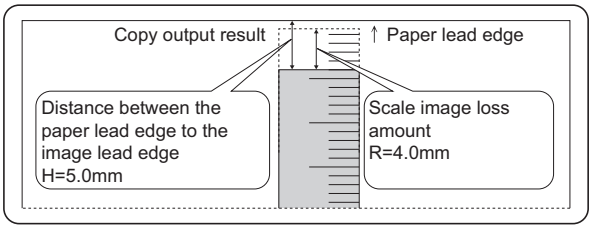 	
	06	**Copy lead edge position adjustment (SPF/RSPF)** Used to perform the image lead edge adjustment in the SPF/RSPF copy. When this simulation is executed, the selection window of the adjustment items and the current set value are displayed. (Adjustment item selection window) 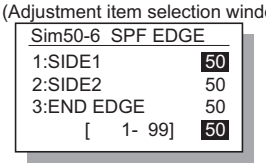 Display text array : Adjustment mode 1: SIDE1 : Document (front) scan start position adjustment 2: SIDE2 : Document (back) scan start position adjustment 3: END EDGE : Document rear edge image loss adjustment The adjustment value is in the range of 1 - 99. When the adjustment value of the document scanning start position is increased by 1, the scanning timing is advanced, resulting in a smaller image loss. Select an adjustment item (mode) with the arrow keys and enter a desired value with numeric keys. When [OK] key is pressed, the entered value is saved to the EEPROM and the machine shifts to the copy execution window. After completion of copying, the machine returns to the adjustment value input window. When [START] key is pressed instead of [OK] key, the machine shifts to the copy execution window and performs copying. (Copy start window) 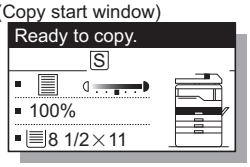 (Copy execution window) 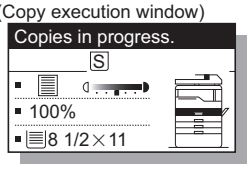 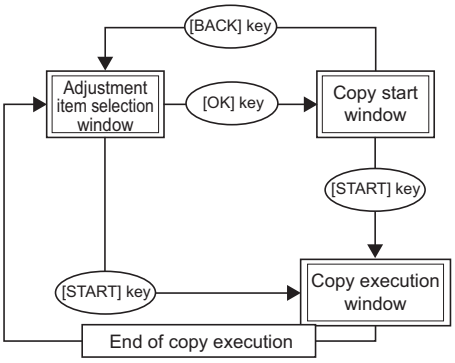 	(Only when the SPF/RSPF is installed.) Default: SIDE1: 50 SIDE2: 50 END EDGE: 50

Main code	Sub code	Contents	Remark
50	08	**FAX lead edge adjustment (scan)** Used to adjust and set the FAX document scan lead edge position and scan and print the document. 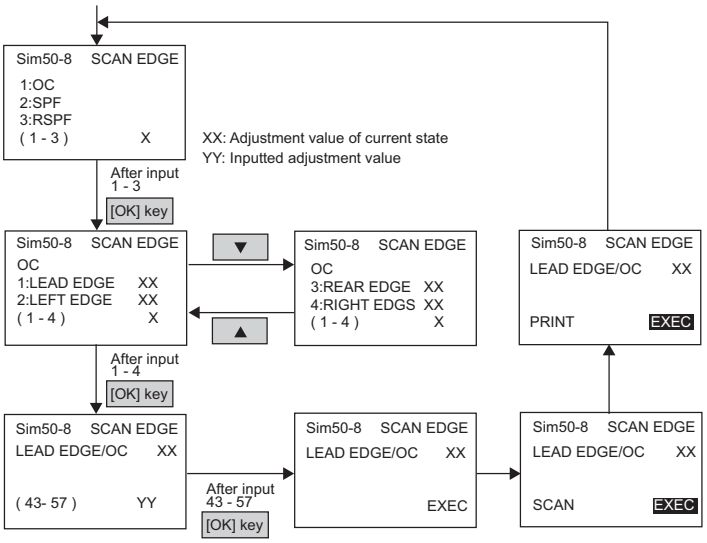 	
	10	**Paper off-center adjustment** Used to adjust the output area (main scanning direction) of scanned image data on paper. When this simulation is executed, the selection window of the adjustment items and the current set value are displayed. (Adjustment item selection window) Display text :Adjustment mode 1:TRAY1 :Print center offset (TRAY1) 2:TRAY2 (*) :Print center offset (TRAY2) 3:TRAY3 (*) :Print center offset (TRAY3) 4:TRAY4 (*) :Print center offset (TRAY4) 5:BYPASS :Print center offset (BYPASS) 6:DUPLEX (*) :Print center offset (DUPLEX 2nd print surface) Note 1: Items marked with (*) are displayed when TRAY2 and following options are not installed. Note 2: When executing an adjustment copy from the manual paper feed (BYPASS) tray, set the following paper according to the destination specification. AB series → A3 paper Inch series → Double Letter paper The adjustment value is in the range of 1 - 99. When the adjustment value is increased, the output image is shifted to the right. When the adjustment value is increased by 1, the image is shifted to the right by about 0.1mm. Select an adjustment item (mode) with the arrow keys, and enter the set value with numeric keys.	Default: TRAY1: 50 TRAY2: 50 TRAY3: 50 TRAY4: 50 BYPASS: 50 DUPLEX: 50

Main code	Sub code	Contents	Remark
50	10	When [OK] key is pressed, the entered value is saved to the EEPROM and the machine shifts to the copy execution window. After completion of copying, the machine returns to the adjustment value input window. When [START] key is pressed instead of [OK] key, the machine shifts to the copy execution window and performs copying. (Copy start window) Ready to copy. S 100% 8 1/2×11 (Copy execution window) Copies in progress. S 100% 8 1/2×11 [BACK] key Adjustment item selection window [OK] key Copy start window [START] key [START] key Copy execution window End of copy execution	
	12	**Document off-center adjustment** Used to adjust the scanning start position in the main scanning direction of the document. When this simulation is executed, the selection window of the adjustment items and the current set value are displayed. (Adjustment item selection window) Sim50-12 ORG. CENTER 1:OC 50 2:SPF(SIDE1) 50 3:SPF(SIDE2) 50 [1- 99] 50 Display text array : Adjustment mode 1: OC : OC document off-center adjustment 2: SPF (SIDE1) : SPF/RSPF document (front) off-center adjustment 3: SPF (SIDE2) : RSPF document (back) off-center adjustment (Note) 2:SPF(SIDE1) is available only for the model with the SPF/RSPF. (Note) 3:SPF(SIDE2) is available only for the model with RSPF. The adjustment value is in the range of 1 - 99. When the adjustment value is increased, the document scanning position is shifted to the right and the image is shifted to the left as a result. When the adjustment value is increased by 1, the scanning area is shifted by 0.1mm. Select an adjustment item (mode) with the arrow keys, and enter the set value with numeric keys. When [OK] key is pressed, the entered value is saved to the EEPROM and the machine shifts to the copy execution window. After completion of copying, the machine returns to the adjustment value input window. When [START] key is pressed instead of [OK] key, the machine shifts to the copy execution window and performs copying. (Copy start window) Ready to copy. S 100% 8 1/2×11 (Copy execution window) Copies in progress. S 100% 8 1/2×11 [BACK] key Adjustment item selection window [OK] key Copy start window [START] key [START] key Copy execution window End of copy execution	Default: OC: 50 SPF(SIDE1): 50 SPF(SIDE2): 50

Main code	Sub code	Contents	Remark
50	18	**Memory reverse position adjustment in duplex copy** Used to adjust the reverse point (scanning end position) on the reversed surface in duplex copy. When this simulation is executed, the selection window of the adjustment items and the current set value are displayed (Adjustment item selection window) Sim50-18 DUP REV. 1:OC 50 2:SPF 50 [1- 99] 50 Display text array : Adjustment mode 1: OC : OC memory reverse output position 2: SPF : RSPF memory reverse output position The adjustment value is in the range of 1 - 99. Front surface print in S-D mode and even page print in D-S mode are reverse memory copy operations from the document rear edge. When, therefore, the print start position adjustment of the output image is required, adjust as follows: The image in the reverse memory copy is printed from the scanning rear edge when the document scanning direction is in the arrow direction as shown below. If, therefore, the print lead edge is shifted, set the reference chart with the rear edge on the reference position, and adjust the simulation set value with this simulation so that the print image lead edge matches. Since printing is started at the print start position from the last memory image data to the head data, the end data position saved in the memory is changed by changing the scanning end position with the simulation, adjusting the image lead edge position. Document transport direction Scan lead edge Scan end position (Default: Void (1) is not scanned.) Scan direction Scan rear edge Paper transport direction Print lead edge Lead edge void (1) Print start position Rear edge void Print rear edge Select an adjustment item (mode) with the arrow keys, and enter the set value with numeric keys. When [OK] key is pressed, the entered value is saved to the EEPROM and the machine shifts to the copy execution window. After completion of copying, the machine returns to the adjustment value input window. When [START] key is pressed instead of [OK] key, the machine shifts to the copy execution window and performs copying. (Copy start window) Ready to copy. S 100% 8 1/2×11 (Copy execution window) Copies in progress. S 100% 8 1/2×11 [BACK] key Adjustment item selection window [OK] key Copy start window [START] key [START] key Copy execution window End of copy execution	(Execution is allowed when DUPLEX setting is ON, and RSPF is installed.) Default: OC: 50 SPF: 50

Main code	Sub code	Contents	Remark
50	19	**Rear edge void adjustment in duplex copy** Used to adjust the rear edge void amount in duplex copy. When this simulation is executed, the selection window of the adjustment items and the current set value are displayed. (Adjustment item selection window) Sim50-19 DUP R VOID 1:PRV(SIDE1) 50 2:PRV(SIDE2) 50 3:RRC-D 50 [1- 99] 50 Display text array : Adjustment mode 1: PRV (SIDE1) : Paper rear edge void amount (1st print surface) 2: PRV (SIDE2) : Paper rear edge void amount (2nd print surface) 3: RRC-D : Print start position (2nd print surface) The adjustment value is in the range of 1 - 99. When the adjustment value is increased by 1, the rear edge void amount is increased by about 0.1mm. Select an adjustment item (mode) with the arrow keys, and enter the set value with numeric keys. When [OK] key is pressed, the entered value is saved to the EEPROM and the machine shifts to the copy execution window. After completion of copying, the machine returns to the adjustment value input window. When [START] key is pressed instead of [OK] key, the machine shifts to the copy execution window and performs copying (Copy start window) Ready to copy. S 100% 8 1/2×11 (Copy execution window) Copies in progress. S 100% 8 1/2×11 [BACK] key Adjustment item selection window [OK] key Copy start window [START] key [START] key Copy execution window End of copy execution	(Execution is allowed when DUPLEX setting is ON, and RSPF is installed.) Default: PRV(SIDE1): 50 PRV(SIDE2): 50 RRC-D: 50
51	02	**Resist amount adjustment** Used to adjust the contact pressure (warp amount) of paper against the resist roller of the main unit resist roller and the SPF/RSPF. When this simulation is executed, the selection window of the adjustment items and the current set value are displayed. (Adjustment item selection window) Sim51-2 RESIST ADJ. 1:TRAY1 50 2:TRAY2 50 3:TRAY3 50 1/4 [1- 99] 50 Sim51-2 RESIST ADJ. 4:TRAY4 50 5:BYPASS 50 6:RSPF(SIDE1) 50 2/4 [1- 99] 50 Sim51-2 RESIST ADJ. 7:RSPF(SIDE2) 50 8:RSPF A5 50 9:DUPLEX 50 3/4 [1- 99] 50 Sim51-2 RESIST ADJ. 10:PRE FEED 50 4/4 [1- 99] 50 Display text :Adjustment mode 1:TRAY1 :Resist amount in paper feed from TRAY1 2:TRAY2 :Resist amount in paper feed from TRAY2 (*1) 3:TRAY3 :Resist amount in paper feed from TRAY3 (*1) 4:TRAY4 :Resist amount in paper feed from TRAY4 (*1) 5:BYPASS :Resist amount in paper feed from manual tray 6:RSPF(SIDE1) :Resist amount on SPF/RSPF document surface (*1) 7:RSPF(SIDE2) :resist amount on RSPF document back (*1) 8:RSPF A5 :Document resist amount in A5 document back transport (*1) 9:DUPLEX :Resist amount in DUPLEX print (Second print surface) (*1) 10: PRE FEED :Pre-feed time of the manual feed tray paper feed. (*2)	Default: TRAY1: 50 TRAY2: 50 TRAY3: 50 TRAY4: 50 BYPASS: 50 RSPF(SIDE1): 50 RSPF(SIDE2): 50 RSPF A5: 50 DUPLEX: 50 PRE FEED: 32

Main code	Sub code	Contents	Remark
51	02	(*1) Valid only when an option is installed. (If an option is not installed, it is not displayed on the adjustment window.) (*2) When heavy paper slips in manual feed copy, or when a paper jam occurs in thin paper copy, adjust this set value to remove the problem. •Heavy paper slips. → Increase the set value. • Thin paper jams. → Decrease the set value. The adjustment range is 1 - 99. Select an adjustment item (mode) with the arrow keys, and enter the set value with numeric keys. When [OK] key is pressed, the entered value is saved to the EEPROM and the machine shifts to the copy execution window. After completion of copying, the machine returns to the adjustment value input window. When [START] key is pressed instead of [OK] key, the machine shifts to the copy execution window and performs copying. 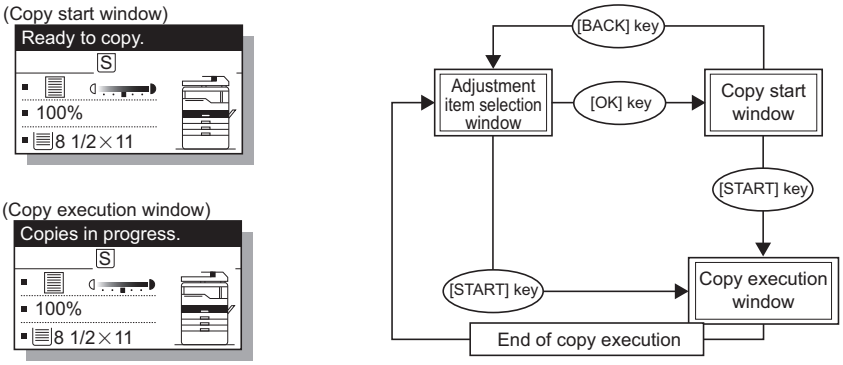 	
53	08	**SPF/RSPF scanning position automatic adjustment** Used to adjust the SPF/RSPF stop position of the mirror unit in the SPF/RSPF copy. The scanning position is basically determined by the automatic adjustment. It can be also adjusted manually. 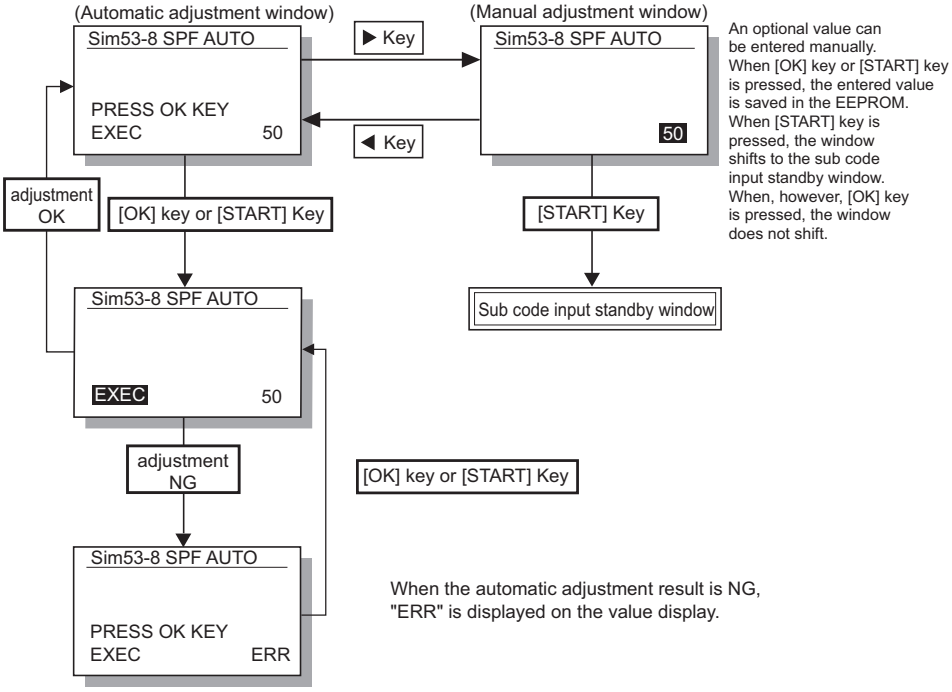 	Default: 50

Main code	Sub code	Contents	Remark
61	02	**Laser power correction ON/OFF (Invalidity)** Enable/Disable of the LSU laser power correction during the operation is set. When [START] key is pressed, the entered set value is saved and the machine enters the sub code input standby mode. 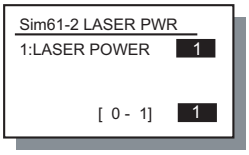 Code number : Mode 0 : Correction Enable 1 : Correction Disable Note: Changing the setting does not affect the operation.	Default: 0
	03	**HSYNC output check** When this simulation is executed, the polygon motor is rotated for 30sec together with the LEND signal. "EXEC" (indicating execution) and "HSYNC" (HSYNC sensor detecting status) are displayed. Every time when the HSYNC signal is detected, "HSYNC" display is highlighted for 100ms. (Initial window) (Execution window) 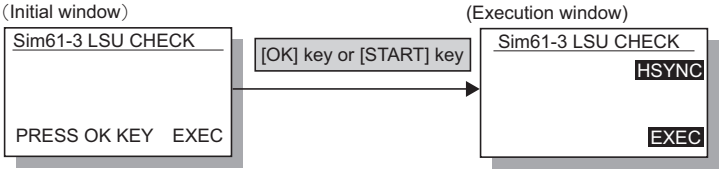 	
63	01	**Shading check** Used to display the detection level when the lamp of the white plate for shading correction is lighted. When the simulation code is entered, the initial window is displayed to urge execution. Press [OK] key or [START] key to start the simulation. The contents of the operations are as follows: 1. The mirror base unit is shifted to the white plate for shading correction. 2. The copy lamp is lighted. 3. "0" is displayed until the copy lamp light quantity is stabilized. 4. When the light quantity is stabilized, the level of 1 pixel on the CCD center which is not corrected is displayed in hexadecimal. * The white level is displayed for about 10sec. The data update cycle is about 1sec. 5. After passing 10sec, the machine returns to the sub code input window. 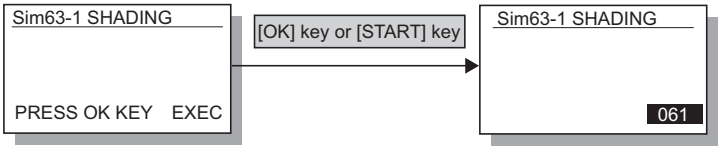 	
64	01	**Self print** Used to perform printing of one page disregarding the optical system status. Also when the print command is issued from the host, printing is performed. When this simulation is executed, warm-up is performed and the ready lamp is lighted. (Since, however, the optical system is invalid, initializing is not performed.) There are following twenty-one self-printable patterns. Use numeric keys to select a pattern. The selected pattern is displayed on 7-segment LED.	

Code number	Print pattern	Image output
0	Grid pattern	(1) 1/236
1	(*1)	(2) 1/128
2		(3) 1/255
3		(4) 2/254
4	Dot print	(1) 1/1
5		(2) 2/2
6		(3) 1/255
7	Equal-pitch pattern	(1) 1/1
8	M by N (Sub scan)	(2) 1/2
9		(3) 2/2
10	Equal-pitch pattern	(1) 1/1
11	M by N (Main scan)	(2) 1/2
12		(3) 2/2

Code number	Print pattern	Image output
13	Black background area (A4/A4R)	(1) 1%
14	(Paper F-R edge)	(2) 6%
15		(3) 35%
16	Black background area (whole surface)	No pattern
17	White background area (whole surface)	No pattern
18	HT (whole surface)	No pattern
19	Black rectangle	No pattern
20	Black lead edge	No pattern
21	Cross pattern	No pattern

Main code	Sub code	Contents	Remark
64	01	(*1) The grid pattern of about 1cm square is outputted. Data are always made for A3 size. If printing is made on paper smaller than A3, the remaining data are not outputted. (Images are not formed on the drum.) 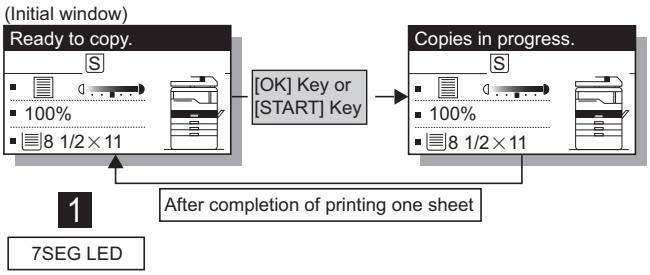 	
65	10	**Key ACK time setting display/non-display setting** Used to set Enable/Disable of the key ACK time setting in the system settings. When this setting is set to Enable (1), the key ACK time is displayed in the system settings, allowing setting. 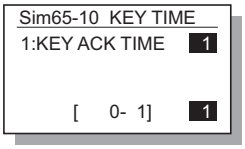 Display: Setting 0: Disable 1: Enable [CA] key: Exit the simulation mode. [INTERRUPT] key: Shifts to the sub code input window.	Default: 1
	11	**Info lamp setting** Used to set the Info lamp brightness (PWM duty) and the kind of flashing. 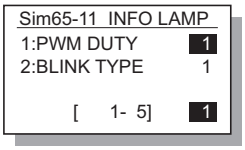 Lamp brightness 1: 100% 2: 80% 3: 60% 4: 40% 5: 20% Kind of flashing 1: Flashing 2: Flashing 10 times, and lighting thereafter. 3: Lighting During this simulation, Info lamp is lighted to allow checking of the brightness. [CA] key: Exit the simulation mode. [INTERRUPT] key: Shifts to the sub code input window.	Default: Lamp brightness: 1 Kind of flashing: 1
66	01	**FAX soft SW setting** Used to display the FAX-related soft SW on the LCD and set and change the soft SW setting with numeric keys input. 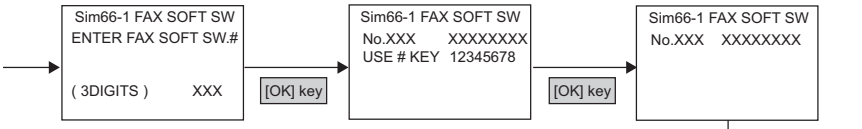 XXX is the input value of the soft SW number. [CA] key : Simulation cancel [INTERRUPT] key : Sub code input window Numeric keys : Soft SW input bit No. input [OK] key : Settlement of the input value [START] key : Settlement of the input value [C] key : Input number clear for soft SW number input, disable for the following windows	

Main code	Sub code	Contents	Remark
66	02	**FAX soft SW initializing** Used to clear the FAX-related soft SW values except for the line signal adjustment value and the machine adjustment value and set them to the default values (which differ depending on the country code).	
	03	**FAX PWB memory check** Used to check read/write from/into the memory on the FAX PWB. The check result is displayed for each memory.	

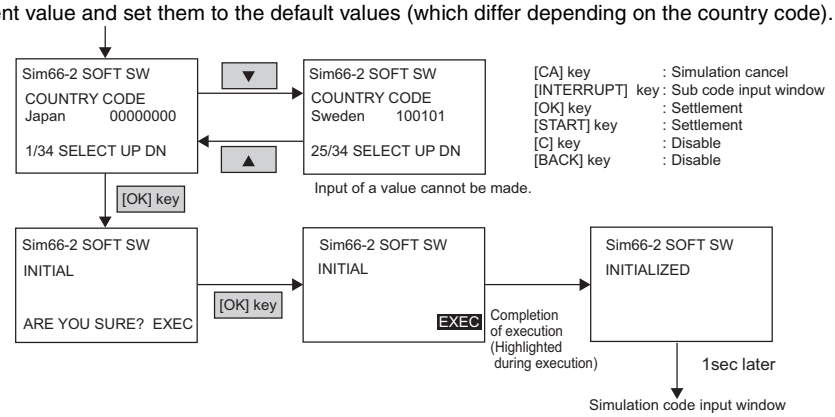

Selection

U.S.A.	10110101	Thailand	10101001	Denmark	00110001	Pohland	10001010
U.K.	10110100	Middle east	11111101	Norway	10000010	Russia	10111000
Germany	00000100	India	01010011	Netherlands	01111011	Brazil	00010110
France	00111101	Sweden	10100101	Luxembourg	01101001		
Australia	00001001	New Zealand	01111110	Belgium	00001111		
China	00100110	Spain	10100000	South Africa	10011111		
Singapore	10011100	Portugal	10001011	Czech	00101110		
Malaysia	01101100	Italy	01011001	Slovakia	11111100		
Hong Kong	01010000	Switzerland	10100110	Hungary	01010001		
Taiwan	11111110	Finland	00111100	Greece	01000110		

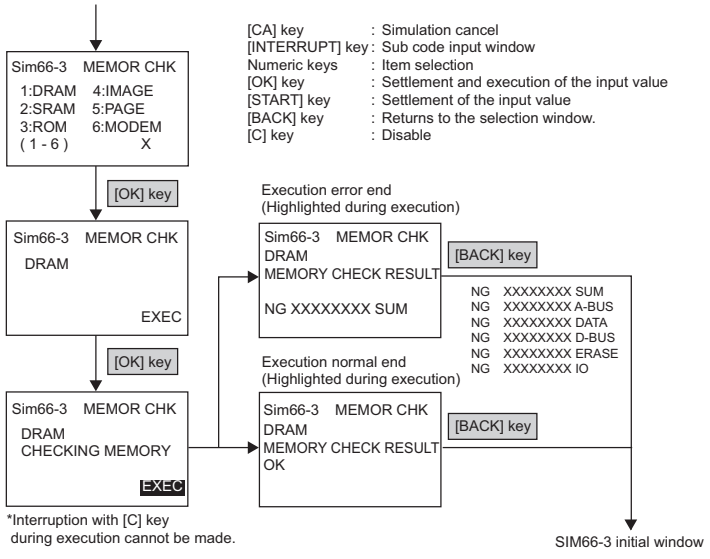

Main code	Sub code	Contents	Remark
66	04	**Signal send mode** Used to send signals to the line and the machine speaker by setting the signal number. (Signal send is continued until interruption is instructed by pressing RETURN key.) The signal send level is selected from 0db and the soft SW values. Since the level setting is not required for 1:NO SIGNAL and 31:PSEUDO RNG - 33:R.B.TONE NONE, the selection menu does not appear. The signal send level is returned to the soft SW set value before execution of the mode when completing the mode. 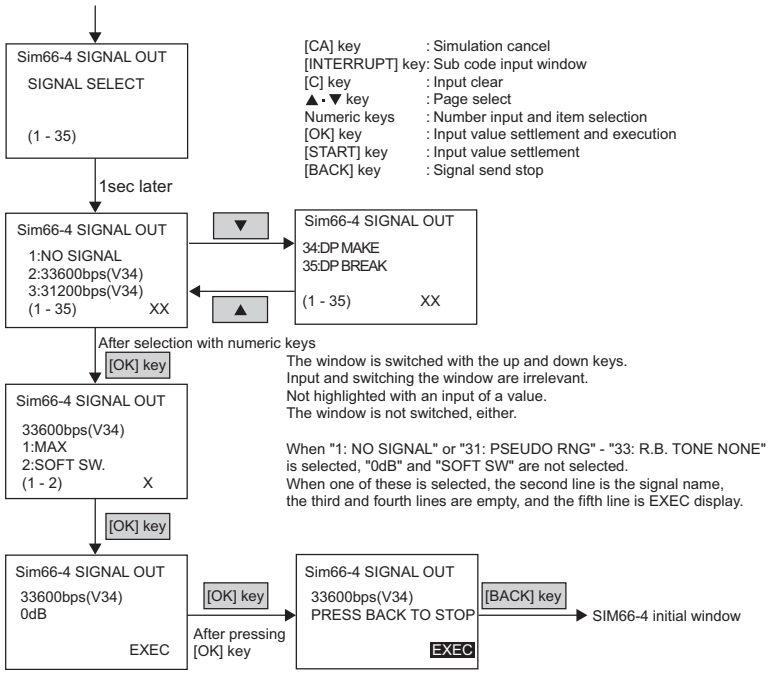 	
	06	**Confidential pass code print** Used to print the confidential ID table (confidential box number, confidential box name, confidential pass code). 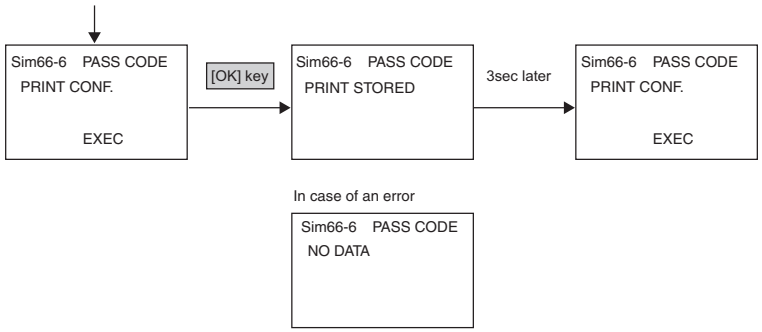 	
	07	**Image memory content print** Used to print all the image data (confidential receive contents, remote send images, and images which are not sent yet) in the image memory of the FAX section. The printed images are remained in the memory after printing. 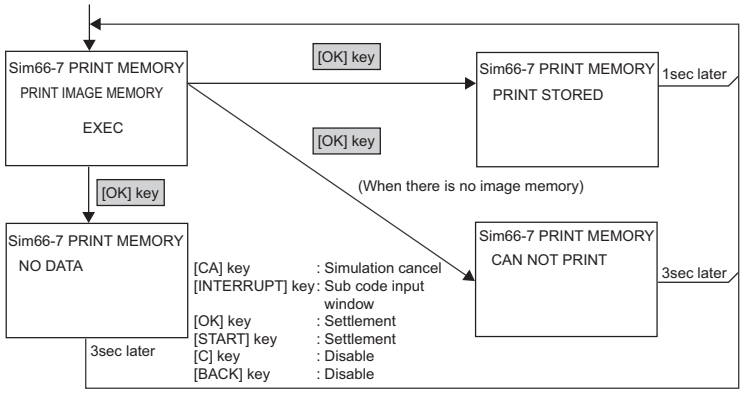 	

Main code	Sub code	Contents	Remark
66	10	**Image memory contents clear** Used to clear all the image data (including confidential receive contents) in the image memory of the FAX section. The management table is also cleared (initialized) at the same time. 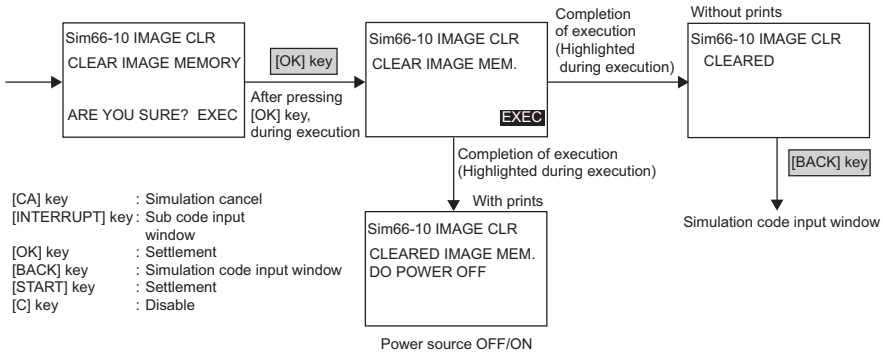 	
	11	**300bps signal send** Used to send the specified signal at the speed of 300bps by setting the signal number. (Signal send is continued until interruption is instructed by pressing RETURN key.) The signal send level is selected from 0db and soft switch set values. The signal send level is returned to the sot SW set value before execution of the mode after completion of the mode. 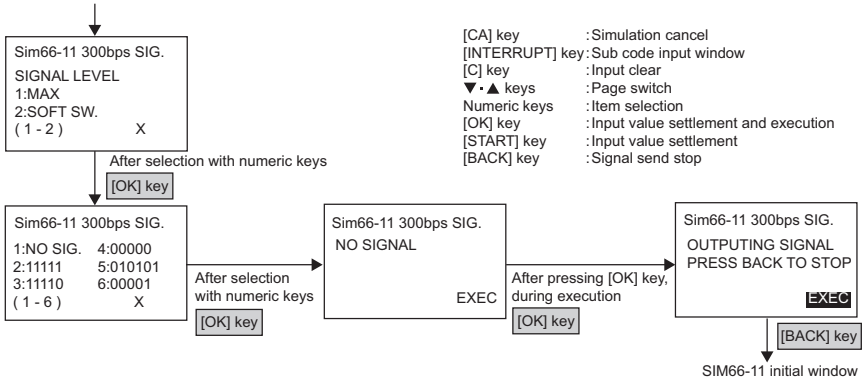 	

Main code	Sub code	Contents	Remark
66	13	**Dial number registration** Used to perform send test and adjustments of the dial pulse and the DTMF signal. Perform send test of the dial pulse and the DTMF signal, and perform adjustments of the make time of the dial pulse and adjustments of the send level of the DTMF signal.	
	17	**DTMF signal send** Used to send the DTMF signal.	

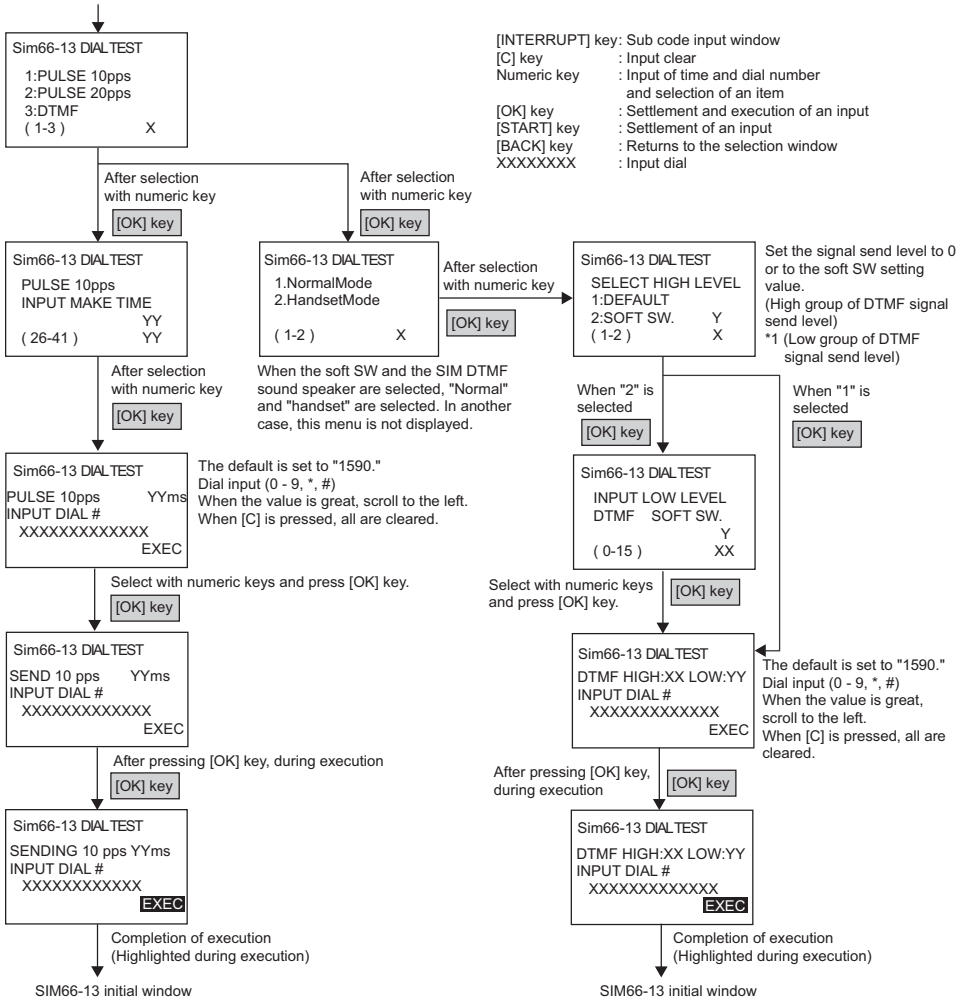

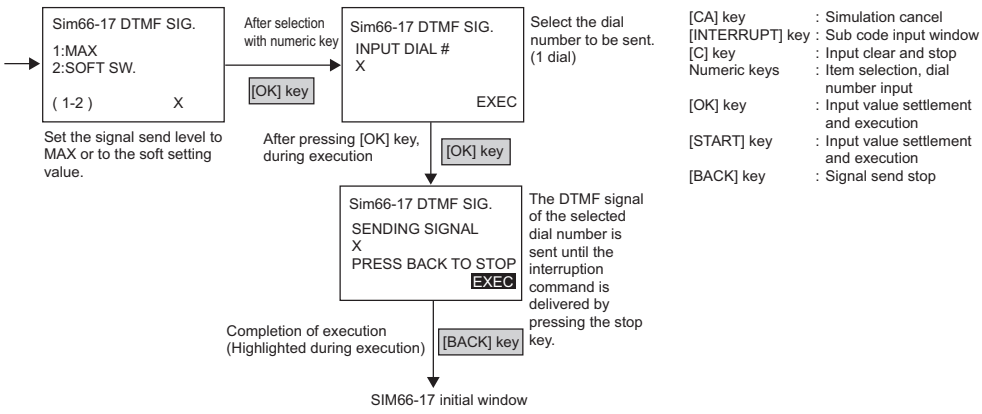

Main code	Sub code	Contents	Remark
66	21	**FAX information print** Used to print the following FAX information. 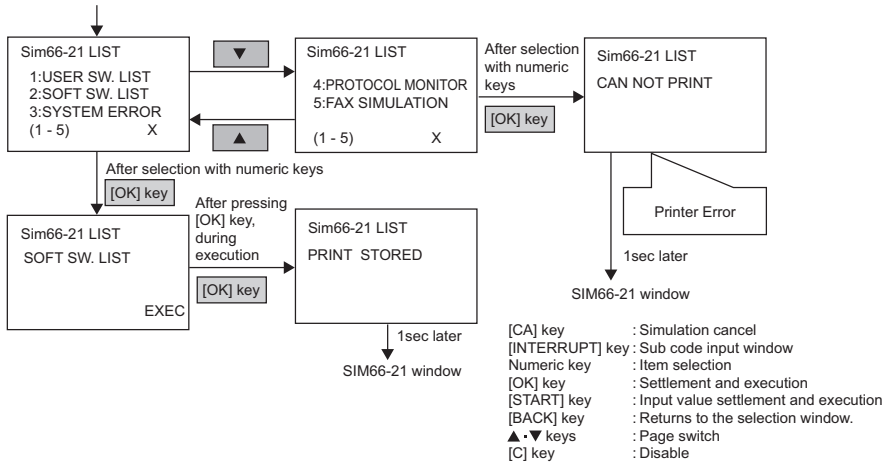 	
	24	**FAST SRAM clear** Used to clear the FAST SRAM data. 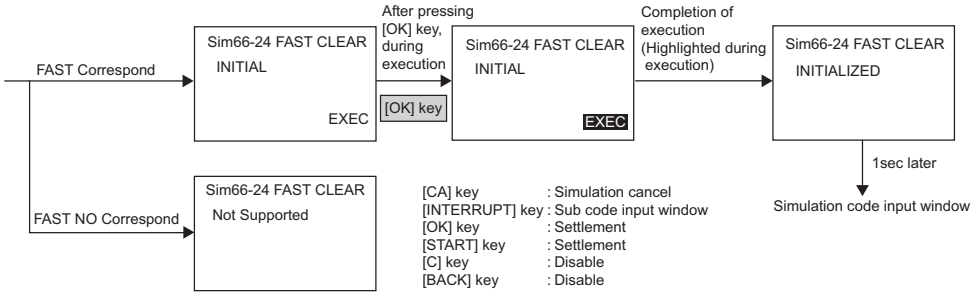 	
	30	**TEL/LIU status change check** Used to display the change contents regardless of the soft SW setting when the status of the polarity inversion relay, the handset hook switch, or the external telephone hook switch is changed. The display of the changed status is remained until the interruption command is made by pressing RETURN key. 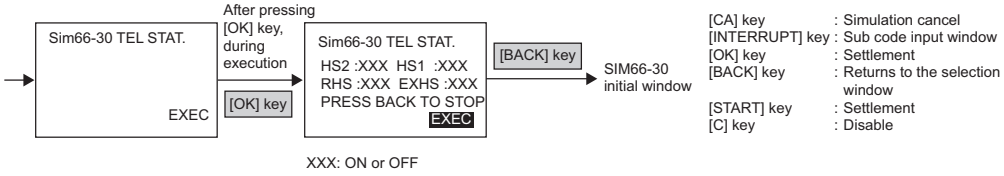 	

Main code	Sub code	Contents	Remark
66	31	**TEL/LIU setting** The following bit 0/1 is alternatively switched. At the same time, the target signal name is highlighted. 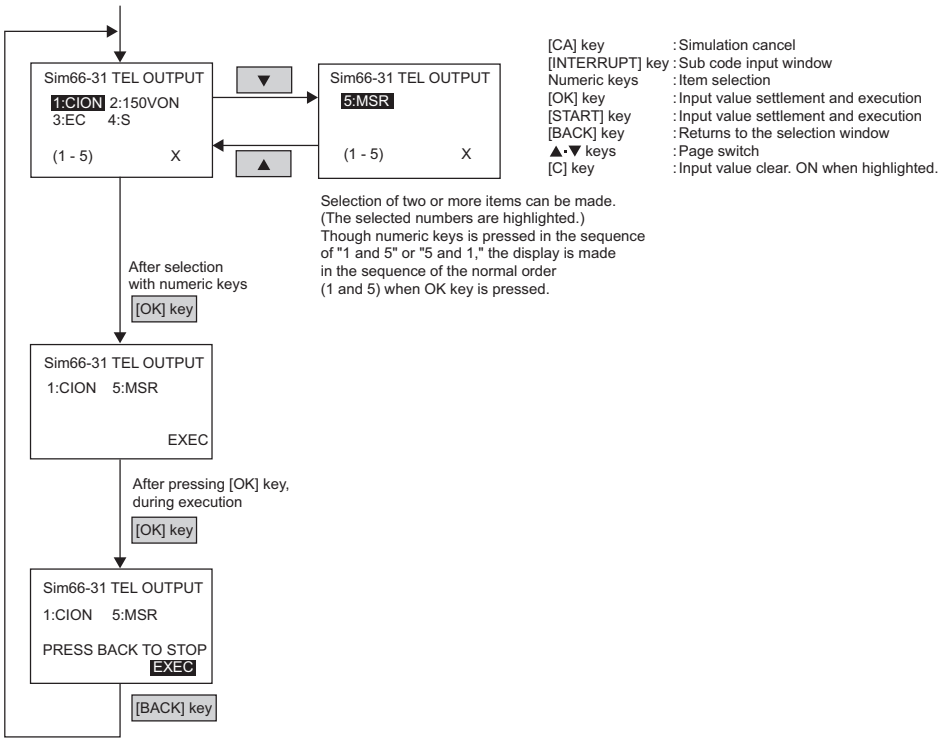 	
	32	**Receive data check** Used to check receive data from the line and judge whether the following receive data and the judged data number accord together or not. If they accord, "OK" is notified. If not, "NG" is notified. Judgment is made from the receive start data and the data must be accorded continuously. 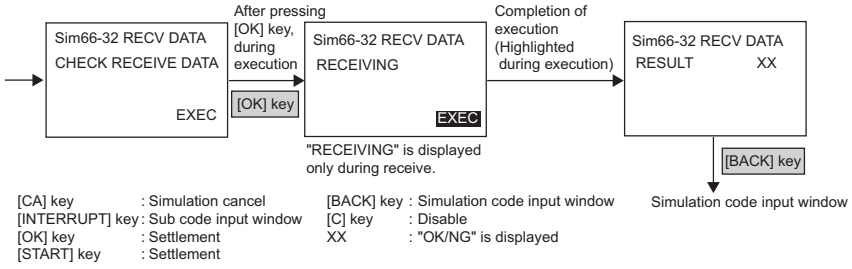 	

Main code	Sub code	Contents	Remark
66	33	**Signal detection check** Used to detect signals and display the result with ON/OFF.	

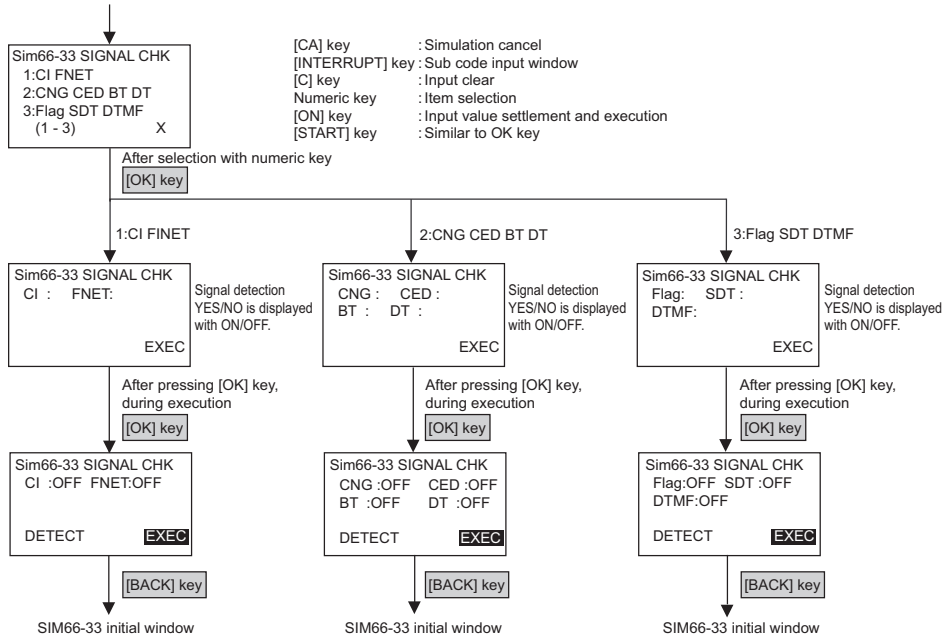

	34	**Communication time measurement** Used to perform a send/receive test and measure and display the time required for send/receive of the image data in the communication.	

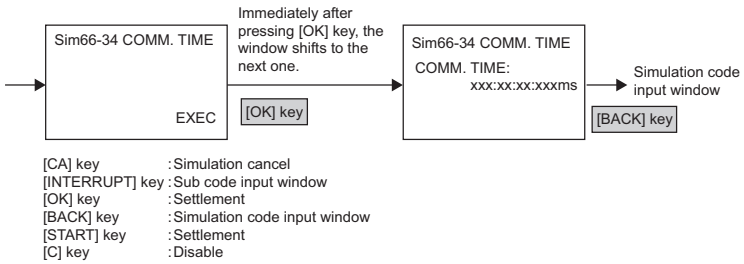

	37	**Speaker sound volume adjustment** Used to adjust the speaker sound volume. During execution of this simulation, the following test sound is sent to the line and the speaker. The send level to the line is set to the soft SW setting value. The speaker sound volume can be adjusted by the operation. The type of sound can be selected among the following: 1.Call sound, 2.Line monitor sound, 3.On-hook, 4.Terminating sound, 5.Communication end sound, 6.DTMF send sound For each type of sound, the sound volume can be selected among the following: No sound, Small, Medium, Large The set value is written into each soft SW.	

Type of sound	Test sound	Sound volume setting value			
		0	1	2	3
1.Call sound	Call sound	No Sound	Small	Medium	Large
2.Line monitor sound	Communication signal sound (33600bps)	No Sound	Small	Medium	Large
3.On-hook	Communication signal sound (33600bps)	Setting disable	Small	Medium	Large
4.Terminating sound	Read end sound	No Sound	Small	Medium	Large
5.Communication end sound	Communication end sound	No Sound	Small	Medium	Large
6.DTMF send sound	DTMF send sound	No Sound	Small	Medium	Large

Main code	Sub code	Contents	Remark
66	37	**The following soft SW's are newly provided.**	

Type of sound	Soft SW number
1. Sound volume of call sound	SW 53-3 - 4
Sound volume of call sound (Low)	SW131-5 - 8
Sound volume of call sound (Medium)	SW132-1 - 4
Sound volume of call sound (High)	SW132-5 - 8
2. Line monitor speaker sound volume	SW 52-5 - 6
Line monitor speaker sound volume (Low)	SW127-1 - 4
Line monitor speaker sound volume (Medium)	SW127-5 - 8
Line monitor speaker sound volume (High)	SW128-1 - 4
3. On-hook speaker sound volume	SW 53-1 - 2
On-hook speaker sound volume (Low)	SW130-1 - 4
On-hook speaker sound volume (Medium)	SW130-5 - 8
On-hook speaker sound volume (High)	SW131-1 - 4
4. Scan end speaker sound volume	SW 52-1 - 2
Scan end speaker sound volume (Low)	SW124-1 - 4
Scan end speaker sound volume (Medium)	SW124-5 - 8
Scan end speaker sound volume (High)	SW125-1 - 4
5. Communication end speaker sound volume	SW 52-7 - 8
Communication end speaker sound volume (Low)	SW128-5 - 8
Communication end speaker sound volume (Medium)	SW129-1 - 4
Communication end speaker sound volume (High)	SW129-5 - 8
6. DTMF send speaker sound volume	SW 52-3 - 4
DTMF send speaker sound volume (Low)	SW125-5 - 8
DTMF send speaker sound volume (Medium)	SW126-1 - 4
DTMF send speaker sound volume (High)	SW126-5 - 8

The following soft SW's are not affected
SW55-4 - 5 Send end sound
SW55-6 - 7 Receive end sound

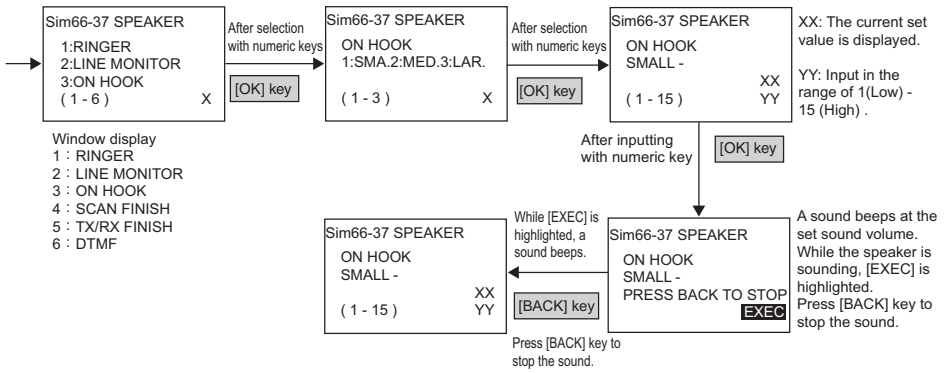

	38	**Time setting/check** Used to write/read the time (year, month, day, o'clock, minute) into/from the RTC on the FAX PWB.	

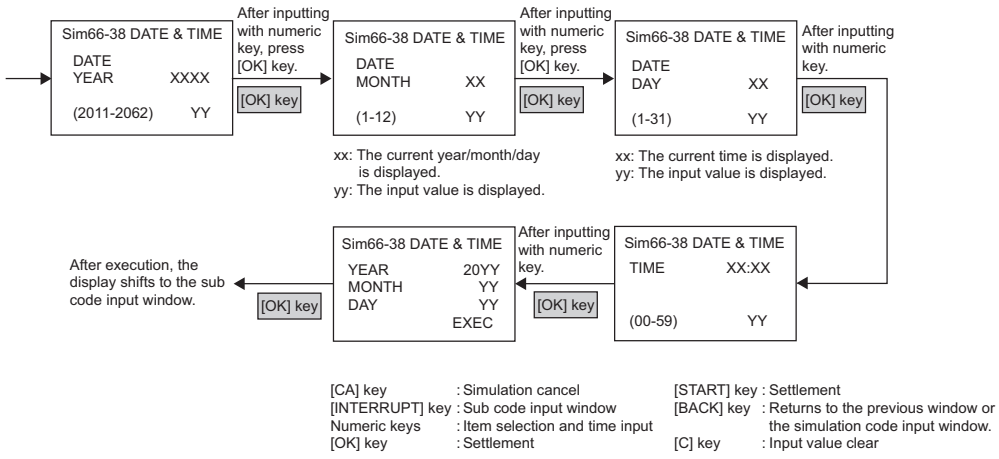

Main code	Sub code	Contents	Remark
66	42	**PIC program writing** Used to write the program again into the power control which is installed to the FAX BOX. 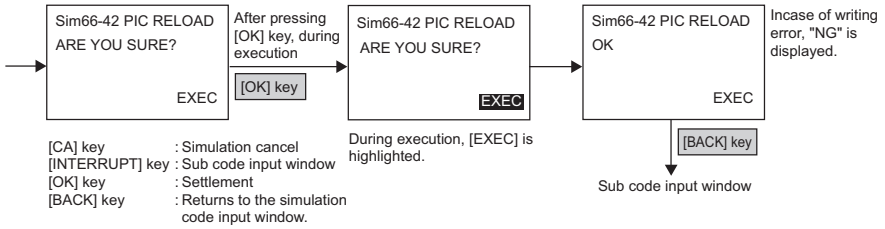 	
	43	**PIC adjustment value writing** Used to write the adjustment value of the program into the power control which is installed to the FAX BOX. Window display / Setting range: 1:CI_LEVEL_JUDGE: 2 - 15 2:CI_CYCLE_MIN: 1 - 254 3:CI_CYCLE_MAX: 2 - 255 4:CI_COUNT: 2 - 15 5:RES_3.3V_LEVEL_JUDGE: 2 - 15 6:EXHS_LEVEL_JUDGE: 2 - 255 7:RHS_LEVEL_JUDGE: 2 - 15 8:SON_TIMEOUT: 1 - 127 9:WRITE: - 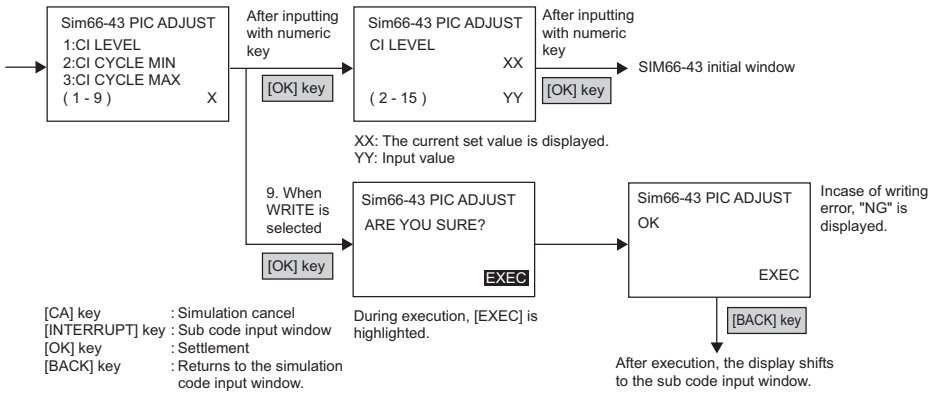 	Default: 1: 6 2: 10 3: 142 4: 3 5: 15 6: 240 7: 2 8: 20
	52	**Pseudo ringer check** • The pseudo ringer sound is delivered both from the machine (speaker). • This operation is continued until the interruption command is made by pressing RETURN key. • The LCD displays the TEL/LIU status and the HOOK status. • While the pseudo ringer is delivered, the RBT)ring back tone) is delivered to the line. The bell is ON for 1sec and OFF for 2sec. 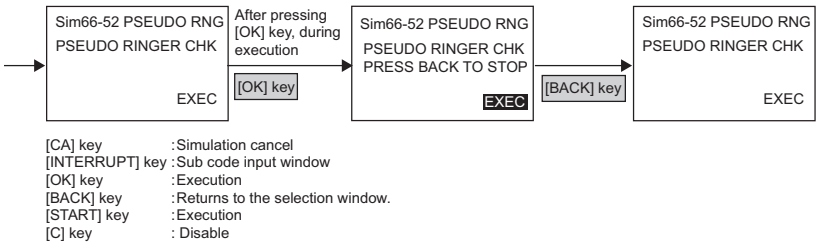 	
67	50	**USB reception speed adjustment** Used to set an limitation on the print data reception speed when the USB transfer speed is at full speed. 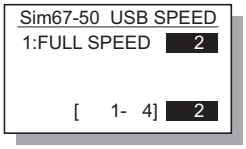 Display : Setting ↑ Fast 1 : FAST 2 : NORMAL 1 3 : NORMAL 2 ↓ Slow 4 : SAFE * When images are disturbed in printing through USB, change the setting and try again. [CA] key: Exits from the simulation mode. [INTERRUPT] key: Shifts to the sub code entry window.	Default: 3

[8] TROUBLE CODE LIST

1.Trouble code list

Main code	Sub code	Content
CE	00	General network errors
	01	NIC error
	02	Server not found
	03	Server down
	04	FTP account error
	05	FTP directory error
	06	Email address error
	09	Email over size limit
	11	Scanner memory shortage
	18	RTC battery error
E7	01	Duplex model memory error/ Image data error
	02	LSU trouble
	06	Image data decode error
	10	Shading trouble (Black correction)
	11	Shading trouble (White correction)
	16	Abnormal laser output
	91	Decode error (FAX print)
	93	Data communication error (FAX scan)
F2	40	ATC sensor abnormality
	64	Toner supply abnormality
	70	Improper cartridge (destination error, life cycle error)
		Identification error
		Model error
		Type error
		Destination error
		Data abnormality
		Misc error
	74	CRUM chip communication error
F5	02	Copy lamp lighting abnormality
F6	00	FAX board communication trouble
	10	FAX board trouble
	80	FAX board communication trouble (Protocol)
	81	FAX board communication trouble (Parity)
	82	FAX board communication trouble (Overrun)
	84	FAX board communication trouble (Framing)
	88	FAX board communication trouble (Time out)
	99	Machine - FAX language error
F9	00	NNB communication trouble
H2	00	Thermistor open (MAIN)
	01	Thermistor open (SUB)
H3	00	Heat roller high temperature detection (MAIN)
	01	Heat roller high temperature detection (SUB)
H4	00	Heat roller low temperature detection
H5	01	5 continuous POUT not-reached error
L1	00	Scanner feed trouble
L3	00	Scanner return trouble
L4	01	Main motor lock detection
	11	Shifter motor trouble
	32	PSFAN lock detection
L6	10	Polygon motor lock detection
L8	01	No full wave signal
U1	03	FAX board battery error
U2	04	EEPROM read/write error (serial communication error)
	11	Counter check sum error (EEPROM)
U9	00	Panel board communication trouble
	80	Panel board communication trouble (Protocol)
	81	Panel board communication trouble (Parity)
	82	Panel board communication trouble (Overrun)
	84	Panel board communication trouble (Framing)
	88	Panel board communication trouble (Time out)
	99	Panel language error
CH ON	None	Door open
CH Blink	None	Developing cartridge not installed

2.Details of trouble codes

Main code	Sub code		Details of trouble
CE	00	Content	General network errors
		Detail	Other network errors
		Check and remedy	Turn OFF and ON the power. Consult the network administrator to check the network server status. If the error still remains, turn OFF the power of the machine, and immediately contact the sales agent.
	01	Content	NIC error
		Detail	An error occurs in the network protocol stack level.
		Check and remedy	Turn OFF and ON the power. Consult the network administrator to check the network server status. If the error still remains, turn OFF the power of the machine, and immediately contact the sales agent.
	02	Content	Server not found
		Detail	The specified sever is not found.
		Check and remedy	Since connection to the server is not established, the scan data cannot be sent. Check to confirm that the SMTP server setting and the destination registration of file server send scan are properly made. For the setting procedure of the SMTP server, refer to "Various servers setting." For the changing procedure of the destination of file server send scan, refer to "How to change or delete the registered destinations." For the input items of each setting, refer to the help menu of the Web screen.
	03	Content	Server down
		Detail	The specified server is not active.
		Check and remedy	Since the server is busy or the line is busy, scan data cannot be set. Wait for a while, and try sending again.
	04	Content	FTP account error
		Detail	An account error occurs when logging in the FTP server.
		Check and remedy	Since connection to the server is not established, the scan data cannot be sent. Check to confirm that the destination registration of file server send scan is properly made. For the changing procedure of the destination of file server send scan, refer to "How to change or delete the registered destinations." For the input items of each setting, refer to the help menu of the Web screen.

Main code	Sub code		Details of trouble
CE	05	Content	FTP directory error
		Detail	The designation of the directory in the FTP server is improper.
		Check and remedy	Since the directory of the FTP server registered as the destination of file server send scan is improper, the scan data cannot be sent. Check to confirm that the registration of the destination is correct.
	06	Content	Email address error
		Detail	Improper email address
		Check and remedy	Since the email address registered as the destination of the email send scan is improper, scan data cannot be sent. Check to confirm that the registered destination information is correct.
	09	Content	Email over size limit
		Detail	The size of an email to be sent exceeds the limit.
		Check and remedy	The size of the scan data exceeds the upper limit of the file size set on the Web screen. Reduce the number of sheets of documents or change the upper limit value in "Send data upper limit" of the Web screen.
	11	Content	Scanner memory shortage
		Detail	Memory shortage in scanner process of MX-NB12.
		Check and remedy	The memory becomes full during scanning documents Reduce the number of sheets of documents, or change the resolution and the color mode in order to reduce the file size of the scan data, then retry sending again.
	12	Content	LDAP number over
		Detail	The number of LDAP exceeds the specification.
		Check and remedy	The number of destinations which are the targets of the global address search exceeds the max. number. Use a longer set of characters for search to narrow the area of search.
	18	Content	RTC battery error
		Detail	The battery for RTC is low.
		Check and remedy	Replace the battery for RTC.
E7	01	Content	Duplex model memory error/ Image data error
		Detail	1. The memory capacity for the duplex model machine is wrong. Insufficient memory capacity. 2. Duplex setting is set for a single surface model.
		Cause	1. The memory capacity on the MCU PWB is wrong. 2. Setting for a single surface model is wrong.
		Check and remedy	1. Use SIM26-39 to check to confirm that the memory capacity is 128MB. If it is not 128MB, replace the MCU PWB. 2. If SIM26-04 is set to 1, change the setting to 0. If it is 0, replace the MCU PWB.

Main code	Sub code		Details of trouble
E7	02	Content	LSU trouble
		Detail	The BD signal from the LSU cannot be detected in a certain cycle. (Always OFF or always ON)
		Cause	LSU connector or LSU harness defect or disconnection Polygon motor rotation abnormality Laser beams are not generated. MCU PWB abnormality.
		Check and remedy	Check connection of the LSU connector. Execute SIM 61-03 to check the LSU operations. Check that the polygon motor rotates normally. Replace the LSU unit. Replace the MCU PWB.
	06	Content	Image data decode error
		Detail	Image expansion error
		Cause	MCU PWB abnormality USB cable trouble
		Check and remedy	Replace the MCU PWB. Replace the USB cable.
	10	Content	Shading trouble (Black correction)
		Detail	The CCD black scan level is abnormal when the shading.
		Cause	Improper connection of the CCD unit flat cable CCD unit abnormality MCU PWB abnormality.
		Check and remedy	Check connection of the CCD unit flat cable. Check the CCD unit.
	11	Content	Shading trouble (White correction)
		Detail	The CCD white scan level is abnormal when the shading.
		Cause	Improper connection of the CCD unit flat cable Dirt on the mirror, the lens, and the reference white plate Copy lamp lighting abnormality CCD unit abnormality MCU PWB abnormality (When occurred in the SPF scan position.) Improper installation of the mirror unit
		Check and remedy	Clean the mirror, the lens, and the reference white plate. Check lighting and the light quantity of the copy lamp (SIM05-03). Check the CCD unit. Check the MCU PWB.
	16	Content	Abnormal laser output
		Detail	When the laser output is stopped, HSYNC is detected.
		Cause	Laser abnormality MCU PWB abnormality.
		Check and remedy	Replace the LSU. Replace the MCU PWB.
	91	Content	Decode error (FAX print)
		Detail	When image data sent from the FAX board to the machine are judged as decode error:
		Cause	Connector connection trouble MCU PWB abnormality
		Check and remedy	Turn OFF/ON the power. Connect the connector again. Replace the MCU PWB.

Main code	Sub code		Details of trouble
E7	93	Content	Data communication error (FAX scan)
		Detail	When data transmission from the machine to the FAX board fails 5 times:
		Cause	Connector connection trouble FAX PWB abnormality
		Check and remedy	Turn OFF/ON the power. Connect the connector again. Replace the FAX PWB.
F2	40	Content	ATC sensor abnormality
		Detail	ATC sensor value abnormality
		Cause	Connector connection trouble Toner cartridge installation trouble Sensor breakdown
		Check and remedy	Connect the connector again. Install the developing unit again. Replace the developing unit with a normal one.
	64	Content	Toner supply abnormality
		Detail	When toner near end is detected with the toner supply time of 50% or less. When the toner supply time exceeds 300%.
		Cause	ATC sensor abnormality Toner supply abnormality
		Check and remedy	Replace the toner cartridge. Replace the developing unit.
F2	70	Content	•Improper cartridge (Destination error, life cycle error) •Identific t ion error •Model error •Type error •Destination error •Data abnormality •Misc error
		Detail	•The destination of the machine differs from that of the CRUM. •The trade mark code of the CRUM differs. •The company code of the CRUM differs. •The boot program model code does not coincide with the CRUM model code. •When the CRUM type is other than genuine/ conversion/production rotation. •The machine destination differs from the CRUM destination.
		Cause	CRUM chip defect Improper toner cartridge.
		Check and remedy	Replace the toner cartridge.
	74	Content	CRUM chip communication error
		Detail	An error occurs during communication between the MCU and the CRUM chip. The CRUM identification error occurs.
		Cause	CRUM chip abnormality Developing unit disconnection MCU PWB abnormality
		Check and remedy	Replace the toner cartridge. Check installation of the developing unit. Use SIM16 to cancel. Replace the MCU PWB.

Main code	Sub code		Details of trouble
F5	02	Content	Copy lamp lighting abnormality
		Detail	The copy lamp does not turn on.
		Cause	Copy lamp abnormality Copy lamp harness abnormality CCD PWB harness abnormality.
		Check and remedy	Use SIM 5-3 to check the copy lamp operations. **When the copy lamp lights up.** Check the harness and the connector between the CCD unit and the MCU PWB. **When the copy lamp does not light up.** Check the harness and the connector between the copy lamp unit and the MCU PWB. Replace the copy lamp unit. Replace the MCU PWB.
F6	00	Content	FAX board communication trouble.
		Detail	FAX board communication error.
		Cause	No command can be sent from the MCU to the FAX.
		Check and remedy	Check connection of the FAX board. Replace the FAX board.
	10	Content	FAX board trouble.
		Detail	FAX board abnormality detection.
		Cause	FAX controller and FAX board memory abnormality.
		Check and remedy	Replace the FAX board.
	80	Content	FAX board communication trouble (Protocol).
		Detail	A break error occurs in communication between the MCU and the FAX board.
		Cause	MCU PWB connector connection failure/ Garbled data.
		Check and remedy	Check connection of the FAX board. Replace the FAX board. Reset the machine (Power OFF/ON).
	81	Content	FAX board communication trouble (Parity).
		Detail	A parity error occurs in communication. between the MCU and the FAX board.
		Cause	MCU PWB connector connection failure/ Garbled data.
		Check and remedy	Check connection of the FAX board. Replace the FAX board. Reset the machine (Power OFF/ON).
	82	Content	FAX board communication trouble (Overrun).
		Detail	An overrun error occurs in communication between the MCU and the FAX board.
		Cause	MCU PWB connector connection failure/ Garbled data
		Check and remedy	Check connection of the FAX board. Replace the FAX board. Reset the machine. (Power OFF/ON).
	84	Content	FAX board communication trouble (Framing).
		Detail	A framing error occurs in communication between the MCU and the FAX board.
		Cause	MCU PWB connector connection failure/ Garbled data.
		Check and remedy	Check connection of the FAX board. Replace the FAX board. Reset the machine (Power OFF/ON).

Main code	Sub code		Details of trouble
F6	88	Content	FAX board communication trouble (Time out).
		Detail	FAX board communication error.
		Cause	There is no respond command from the FAX for 30sec or more.
		Check and remedy	Check connection of the FAX board. Replace the FAX board. Reset the machine (Power OFF/ON).
	99	Content	Machine - FAX language error.
		Detail	Discrepancy of the destination of the machine and the FAX board.
		Cause	The destination of the machine differs from that of the FAX board. When installing to the machine that can install only MX-FX13.
		Check and remedy	Change the destination setting with SIM26-6. Replace the FAX board with one which. conforms to the destination of the machine.
F9	00	Content	MX-NB12 board communication trouble.
		Detail	MX-NB12 print data reception error.
		Cause	Print data cannot be received from the MX-NB12 for 3 min or more.
		Check and remedy	Reset the machine (Power OFF/ON).
H2	00	Content	Thermistor open (MAIN)
		Detail	The thermistor is open. The fusing unit is not installed.
		Cause	Thermistor abnormality Control PWB abnormality Fusing section connector disconnection The fusing unit is not installed.
		Check and remedy	Check the harness and the connector between the thermistor and the PWB. Cancel the trouble with SIM 14.
	01	Content	Thermistor open (SUB)
		Detail	The sub thermistor is open. The fusing unit is not installed.
		Cause	Sub thermistor abnormality Heater lamp abnormality Thermostat abnormality Main PWB abnormality
		Check and remedy	Use SIM 5-02 to check the heater lamp blinking operation. **When normally lighting.** Check the sub thermistor and its harness. Check the sub thermistor input circuit on the MAIN PWB. **When not normally lighting.** Check the lamp control circuit on the MCU PWB. Cancel the trouble with SIM 14.

Main code	Sub code		Details of trouble
H3	00	Content	Heat roller high temperature detection (MAIN)
		Detail	The fusing temperature exceeds 245C°.
		Cause	Thermistor abnormality Control PWB abnormality Fusing section connector disconnection.
		Check and remedy	Use SIM 5-02 to check the heater lamp blinking operation. **When the lamp blinks normally.** Check the thermistor and its harness. Check the thermistor input circuit on the control PWB. **When the lamp keeps ON.** Check the power PWB and the lamp control circuit on the MCU PWB. Cancel the trouble with SIM 14.
	01	Content	Heat roller high temperature detection (SUB)
		Detail	The fusing temperature exceeds 245°C.
		Cause	Sub thermistor abnormality Heater lamp abnormality Thermostat abnormality Main PWB abnormality
		Check and remedy	Use SIM 5-02 to check the heater lamp blinking operation. **When normally lighting.** Check the sub thermistor and its harness. Check the sub thermistor input circuit on the MAIN PWB. **When not normally lighting.** Check the lamp control circuit on the MCU PWB. Cancel the trouble with SIM 14.
H4	00	Content	Heat roller low temperature detection
		Detail	When the fusing temperature is 150C° or less in 55 sec from starting warming-up. When the warm-up complete temperature is not reached in 30 sec from reaching 150C°. When the fusing temperature is less than 100C° in 20 sec from the ready state. When the fusing temperature is less than 80C° for more than 300ms in the ready state or in printing. When the fusing temperature is less than 80C° for more than 300ms in the standby mode at a low temperature.
		Cause	Thermistor abnormality Heater lamp abnormality Thermostat abnormality Control PWB abnormality
		Check and remedy	Use SIM 5-02 to check the heater lamp blinking operation. **When the lamp blinks normally.** Check the thermistor and its harness. Check the thermistor input circuit on the control PWB. **When the lamp does not light up.** Check for disconnection of the heater lamp and the thermostat. Check the interlock switch. Check the power PWB and the lamp control circuit on the MCU PWB. Cancel the trouble with SIM 14.

Main code	Sub code		Details of trouble
H5	01	Content	5 continuous POUT not-reached error
		Detail	When 5 continuous not-reached jams to the paper exit sensor (POUT) occur. The jam counter is backed up and it is used in a job after turning on the power.
		Cause	Jam paper is not removed from the fusing unit. (Jam paper remains.) Paper exit sensor breakdown or harness connection trouble Fusing unit installation trouble
		Check and remedy	Check for jam paper remaining in the fusing unit. (winding, etc.) Check the POUT sensor harness, and check installation of the fusing unit. Use SIM14 to clear the self diag display.
L1	00	Content	Scanner feed trouble
		Detail	Though the specified steps of motor pulses are outputted, the mirror home position sensor remains ON.
		Cause	Mirror unit abnormality The scanner wire is disconnected. The origin detection sensor abnormality Mirror motor harness abnormality
		Check and remedy	Use SIM 1-1 to check the mirror reciprocating operations. **When the mirror does not feed.** Check for disconnection of the scanner wire. Check the harness and the connector between the mirror motor and the MCU PWB. Replace the mirror unit. Replace the MCU PWB. **When the mirror does feed.** Use SIM 1-2 to check the mirror home position sensor.
L3	00	Content	Scanner return trouble
		Detail	Though the specified steps of motor pulses are outputted, the mirror home position sensor does not turn ON.
		Cause	Mirror unit abnormality Scanner wire disconnection Origin detection sensor abnormality Mirror motor harness abnormality
		Check and remedy	Use SIM 1-1 to check the mirror reciprocating operations. **When the mirror does not return.** Check for disconnection of the scanner wire. Check the harness and the connector between the mirror motor and the MCU PWB. Replace the mirror unit. Replace the MCU PWB. **When the mirror does feed.** Use SIM 1-2 to check the mirror home position sensor.

Main code	Sub code		Details of trouble
L4	01	Content	Main motor lock detection
		Detail	The main motor does not rotate. After rotation of the main motor, the motor lock signal is detected for 1 sec or more. During rotation of the main motor, the motor lock signal is detected for 1 sec. When the main motor is stopped, the motor lock signal is not detected for 5sec or more. (Though the motor is stationary, it is judged as stable rotation.)
		Cause	Main motor unit abnormality Improper connection or disconnection the main motor and the harness. MCU PWB abnormality
		Check and remedy	Use SIM 25-01 to check the main motor operations. Check connection of the main motor harness/ connector. Replace the main motor. Replace the MCU PWB.
	11	Content	Shifter motor trouble.
		Detail	The shifter home position detection signal is not detected when initializing the shifter.
		Cause	Shifter motor abnormality, improper connection or disconnection of the harness, shifter home position sensor abnormality.
		Check and remedy	Use SIM 03-11 to check the shifter motor operations. Check connection of the harness/connector of the shifter motor. Replace the shifter motor. Replace the MCU PWB.
	32	Content	PSFAN lock detection
		Detail	The PSFAN does not rotate. Sampling is performed in 50msec interval, and the normal signal cannot be detected 5 times continuously in 1 sec.
		Cause	Fan trouble or harness contact trouble and disconnection
		Check and remedy	Check connection of the fan harness and the connector. Replace the fan. Replace the MCU PWB.
L6	10	Content	Polygon motor lock detection
		Detail	The polygon motor does not rotate After beginning to rotate the polygon motor, the motor lock signal is detected for 20sec or more. During rotation of the polygon motor, the motor lock signal is detected for 1sec.
		Cause	Polygon motor unit abnormality Improper connection or disconnection of the polygon motor and the harness. MCU PWB abnormality
		Check and remedy	Use SIM 61-3 to check the polygon motor operations. Check connection of the polygon motor harness/connector. Replace the LSU unit. Replace the MCU PWB.

Main code	Sub code		Details of trouble
L8	01	Content	No full wave signal.
		Detail	The zero cross signal is not detected.
		Cause	Power unit abnormality. MCU PWB abnormality.
		Check and remedy	Check connection of the harness and connectors. Replace the MCU PWB. Replace the power unit.
U1	03	Content	FAX board battery error.
		Detail	FAX board backup battery error.
		Cause	The voltage of the backup battery of SRAM which is installed to the FAX board falls below a certain level.
		Check and remedy	Replace the battery.
U2	04	Content	EEPROM read/write error (Serial communication error)
		Detail	EEPROM access process error
		Cause	EEPROM abnormality
		Check and remedy	Check that the EEPROM is properly set. Use SIM 16 to cancel the trouble. Replace the MCU PWB.
	11	Content	Counter check sum error (EEPROM)
		Detail	Check sum error of the counter area in the EEPROM
		Cause	EEPROM abnormality
		Check and remedy	Check that the EEPROM is properly set. Use SIM 16 to cancel the trouble. Replace the MCU PWB.
U9	00	Content	Panel board communication trouble.
		Detail	Communication trouble with the panel board.
		Cause	No command can be sent from the MCU to the panel.
		Check and remedy	MCU PWB - Panel PWB harness trouble. Replace the panel or the MCU PWB. Machine reset (Power OFF/ON).
	80	Content	Panel board communication trouble (Protocol).
		Detail	An error occurs in communication between MCU -Panel PWB.
		Cause	MCU PWB - Panel PWB harness trouble/ Garbled data.
		Check and remedy	MCU PWB - Panel PWB harness trouble. Replace the panel or the MCU PWB. Machine reset (Power OFF/ON).
	81	Content	Panel board communication trouble (Parity).
		Detail	A parity error occurs in communication between the MCU and the Panel PWB.
		Cause	MCU PWB - Panel PWB harness trouble/ Garbled data.
		Check and remedy	MCU PWB - Panel PWB harness trouble. Replace the panel or the MCU PWB. Machine reset (Power OFF/ON).
	82	Content	Panel board communication trouble (Overrun).
		Detail	An overrun error occurs in communication between the MCU and the panel board.
		Cause	MCU PWB - Panel PWB harness trouble/ Garbled data.
		Check and remedy	MCU PWB - Panel PWB harness trouble. Replace the panel or the MCU PWB. Machine reset (Power OFF/ON).

Main code	Sub code		Details of trouble
U9	84	Content	Panel board communication trouble (Framing).
		Detail	A framing error occurs in communication between the MCU and the Panel PWB.
		Cause	MCU PWB - Panel PWB harness trouble/ Garbled data.
		Check and remedy	MCU PWB - Panel PWB harness trouble. Replace the panel or the MCU PWB. Machine reset (Power OFF/ON).
	88	Content	Panel board communication trouble (Time out).
		Detail	A time-out error occurs in communication between the MCU and the Panel PWB.
		Cause	A command is completely sent from the MCU to the panel.
		Check and remedy	MCU PWB - Panel PWB harness trouble. Replace the panel or the MCU PWB. Machine reset (Power OFF/ON).
	99	Content	Panel language error.
		Detail	Language discrepancy error.
		Cause	Discrepancy between the machine language and the panel language.
		Check and remedy	Replace the panel or the MCU PWB. Reset the machine. (Power OFF/ON).
CH ON	None	Content	Side door open
		Detail	The side door is open.
		Cause	Side door sensor abnormality MCU PWB abnormality
		Check and remedy	Check that all the side doors are closed. Replace the MCU PWB.
CH Blink	None	Content	Developing cartridge not installed
		Detail	The developing cartridge is not installed. Communication with the CRUM cannot be made in initial check of the CRUM.
		Cause	Developing unit disconnection MCU PWB abnormality CRUM chip abnormality
		Check and remedy	Check installation of the developing unit. Replace the MCU PWB.

3.Communication result code

Described on the communication report table, the communication management table, and the protocol communication report table when communication is completed.

A. Composition of communication report code

Communication result X X (X X X X)

Upper 2 digits of a communication result code: Communication report code of 00 - 90 (Refer to the list of communication report codes.)

Lower 4 digits of a communication result code: Codes used by serviceman.

Top 2 digits	Communication report sub code 1 (Refer to the list of communication sub code 1.)
Bottom 2 digits	Communication report sub code 2 (Refer to the list of communication sub code 2.)

Note) Communication report sub code 1 and sub code 2 are in hexadecimal. (The others are in decimal.)

<Communication result code list>

Result code	Final reception signal (Transmitting side)	Final reception signal (Receiving side)
0	Abnormal signal	Abnormal signal
1	NSF, DIS	(SID), (SUB), NSS, DCS
2	CFR	(PWD), (SEP), NSC, DTC
3	FTT	EOP
4	MCF	EOM
5	PIP, PIN	MPS
6	RTN, RTP	PRI-Q
7	No signal, DCN	DCN
8	PPR	PPS-EOP
9		PPS-EOM
10		PPS-MPS, PPS-NULL
11	RNR	RR
12	CTR	CTC
13	ERR	EOR-Q
14		PPS-PRI-Q
15		
16	Abnormal signal	Abnormal signal
17	NSF, DIS	SID, SUB, NSS, DCS
18	CFR	PWD, SEP, NSC, DTC
19	FTT	PPS-EOP
20	MCF	PPS-EOM
21	PIP, PIN	PPS-MPS, PPS-NULL
22	RTN, RTP	PRI-Q
23	No signal, DCN	DCN
24	PPR	
25	RNR	RR
26	CTR	CTC
27	ERR	EOR-Q
28		PPS-PRI-Q
29	V.8 Phase-1	V.8 Phase-1
30	V.8 Phase-2	V.8 Phase-2
31	V.8 Phase-3	V.8 Phase-3

(Note) For result codes 16 - 31, V.34 mode communication.
For 32 or later, refer to the table below.

<Communication result code list>

Result code (Communication result)	Communication report result column	Communication interruption content
0 – 31	Refer to the previous table.	Depends on the communication disconnection position. For 16 or later, V.34 mode communication.
33	Busy	The calling side cannot connect the line with the other party.
34	Cancel	When a communication interruption command is delivered during transmission or reception, <Send/Receive/Poll/Bulletin> When the operation is interrupted by the stop key.
35	Power OFF	When the power is cur off during sending or receiving, <Send/Receive/Poll/Bulletin>
38	Reception memory over	When memory is over during reception, <Receive/Poll>. When printing cannot be performed during reception due to inhibition of proxy reception, <Receive/Poll>
42	Reception length over	When the received data length of one page exceeds the range during reception, <Receive/Poll>
44	Document error	When a document jam occurs during direct transmission, <Send>
46	No response from the other party	When the FAX signal from the other party is not detected within T1 time, <Send/Poll>
48	OK	Communication normal end
49	The other party has no polling function.	When the called side has no polling function in polling reception, <Poll> When the called side has no transmission data, <Bulletin>
50	Polling is not accepted.	When DCN is received for DTC in polling reception, <Poll> When there is no transmission data in polling transmission, <Bulletin>
51	Polling allow number discrepancy	When the allow number does not coincide in polling transmission, <Bulletin> When the system number does not coincide in polling transmission, <Bulletin>
56	Interface not accepted	1) When DCN is received for NSS in transmission of the relay instruction, <Send> 2) When a receiving station number that is not registered is instructed in reception of the relay instruction, <Receive> 3) When F code relay instruction is received during F code relay broadcasting, <Receive>
59	The other party has no function of F code bulletin board.	When the other party machine does not have DIS bit 47 (Selective polling function) in F code polling (ringing), <Poll>
60	F code polling is not accepted.	When DCN is received for SEP in F code polling (ringing), <Poll> When there is no transmission data for SEP in bulletin board, <Bulletin>
61	F code bulletin board number discrepancy	When the sub address (bulletin board number (SEP)) does not coincide in bulletin board, <Bulletin>
62	F code bulletin board password discrepancy	When the pass code (PWD) does not coincide in bulletin board, <Bulletin>
63	The other party has no function of F code.	When the other party machine does not have DIS bit 49 (sub address capacity) in F code transmission, <Send>. Check that the other party machine conforms to F code.

Result code (Communication result)	Communication report result column	Communication interruption content
64	F code is not accepted.	When F code is transmitted, <Send> 1) When DCN is received for SUB, check the BOX number. 2) When DCN is received for SID, check BOX number and the pass code. When F code is received, <Receive> When the F code relay broadcast function or the F code confidential reception function is inhibited with soft switches.
67	F code password discrepancy	When the pass code (SID) does not coincide in F code reception, <Receive>
68	BOX NO. NG	When a BOX number that is not registered is instructed (SUB discrepancy) in F code reception, <Receive>
69	Memory over	Memory over in quick online sending

- When communication result is OK, the communication result sub code 1 and sub code 2 are 0000.
- < > indicates the communication means. <Send>, send; <Receive>, receive; <Poll>, polling; <Bulletin>, bulletin board

The status code from the modem in V.34 mode is indicated with the communication result sub code 1 (top 2 digits). However, the communication sub code 1 is 00 in communication other than V.34 mode.

<Communication result sub code>

Result code 2	Communication interruption content	Transmission/ Reception
02	EOL time over	Reception
03	Carrier detection time over	Reception
06	Memory image decoding error	Reception
07	Memory image decoding error	Transmission
08	Time up between frames in phase C	Transmission/ Reception
11	Polarity reversion detection	Reception
12	Invalid command reception	Reception
13	Time over (1min timer/6sec timer)	Reception
14	PUT error	Reception
15	In V.34 mode, time up is generated when shifting from Primary to Control.	Reception
16	In V.34 mode, time up is generated when shifting from Control to Primary.	Reception
20	Polarity reversion detection	Transmission
21	Invalid command reception	Transmission
22	Fall back retry number over	Transmission
23	Resend over of the number of times of command retry	Transmission
24	Time over (T5 timer)	Transmission
25	Time over (T5 timer) in V.34 mode	Transmission
26	Time over occurrence during shift from Primary to Control in V.34 mode	Transmission
28	Modem chip answering NG	Transmission/ Reception

[9] MAINTENANCE

1. Maintenance table

X:Check(Clean, adjust, or replace when required.) O:Clean ▲:Replace △:Adjust ☆ :Lubricate

Unit name	Part name	When calling	50K	100K	150K	200K	250K	Remark
Drum peripheral	OPC drum	-	▲	▲	▲	▲	▲	
	Cleaning blade	-	▲	▲	▲	▲	▲	
	Side seal F/R	X	X	X	X	X	X	
	MC unit	X	▲	▲	▲	▲	▲	
	(MC charging electrode)	-	(▲)	(▲)	(▲)	(▲)	(▲)	Exchange if necessary
	(MC grid)	-	(▲)	(▲)	(▲)	(▲)	(▲)	Exchange if necessary
	(MC case)	-	(▲)	(▲)	(▲)	(▲)	(▲)	Exchange if necessary
	Transfer wire	O	O	O	O	O	O	
	Transfer paper guide	O	O	O	O	O	O	
	MC guide seal (Cleaning blade)	-	▲	▲	▲	▲	▲	
	Drum fixing plate B	X	▲	▲	▲	▲	▲	
	Separation pawl	X	▲	▲	▲	▲	▲	
	Star ring N2							
	Star ring ϕ5							
	Pawl holder PAN							
	Process frame unit	X	X	X	▲	X	X	
	Discharge holder	O	O	O	O	O	O	
Developing section	Developer	X	▲	▲	▲	▲	▲	
	DV seal	X	X	X	▲	X	X	
	Toner density sensor	X	X	X	X	X	X	Check the sensor head surface.
	DV side seal F/R	X	X	X	X	X	X	
Optical section	Reflector	O	O	O	O	O	O	
	Mirrors	-	O	O	O	O	O	
	Pulley	-	X	X	X	X	X	
	CCD Lens	-	O	O	O	O	O	
	Table glass	O	O	O	O	O	O	
	White Plate	O	O	O	O	O	O	
	Drive wire	-	X	X	X	X	X	
	Rail	-	X ☆	X ☆	X ☆	X ☆	X ☆	
	OC	O	O	O	O	O	O	
LSU	Dust-proof glass	O	O	O	O	O	O	
Paper feed section	Manual feed take-up roller	O	O	O	O	O	O	*2 Alcohol cleaning
	Transport rollers	O	O	O	O	O	O	*2 Alcohol cleaning
	Spring clutch	-	O ☆	O ☆	O ☆	O ☆	O ☆	
	Electromagnetic clutchs	-	X	X	X	X	X	
Fusing section	Upper heat roller	X	O	O	▲	O	O	
	Pressure roller	X	O	O	O	O	O	
	Pressure roller bearing	-	X	X	O ☆	O ☆	O ☆	
	Upper separation pawl	X	X	X	O	O	O	
	Lower separation pawl	X	X	X	O	O	O	
	Cleaning pad	X	X	X	▲	X	X	
Drive section	Gears	-	X ☆	X ☆	X ☆	X ☆	X ☆	
	Belts	-	X	X	O	X	X	
Paper exit section	VOC filter	-	▲	▲	▲	▲	▲	*1
Document transport section	Pickup roller	O	O	O	O	O	O	*3
	Handling unit	X	X	X	X	X	X	*2
	Handling sheet	X	X	X	X	X	X	
	Paper feed roller	O	O	O	O	O	O	*3
	PS roller	O	O	O	O	O	O	
	Transport roller	X	X	X	X	X	X	
	Paper exit roller	X	X	X	X	X	X	
Cassette paper feed section	Paper feed roller	X	X	X	▲	X	X	*2
	Handling unit	X	X	X	X	X	X	
	Handling sheet	X	X	X	▲	X	X	*2

*1: Recommendable replacement time:50K(A4, 6%print)

*2: In maintenance cycle, after beginning to use each paper feed counter 100K, one year is a standard. Exchange when worn out.

*3: Maintenance cycle is RSPF document FEED value 100K (Sim.22-8). Or, after it begins to use it, one year is a standard. When worn out, it exchanges it.

2. Maintenance display system

Toner	Life,	16K	
	Remaining quantity check *1	a. Press and hold the density adjustment LIGHT key for more than 5 sec, and the machine will enter the user program mode. b. Press and hold the "%" key for more than 5 sec, and the remaining quantity will be displayed on the copy quantity display in one of the following levels: (Remaining quantity display levels: 100%, 75%, 50%, 25%, 10%, LO) c. Press the density adjustment LIGHT key to cancel.	
	Remaining quantity	NEAR EMPTY About 10%	EMPTY
	Message and icon on the LCD	ON	Flash
	Machine	Operation allowed	Stop
Developer	Life	50K	
	Message and icon on the LCD	ON at 50K of the developer count	
	Machine	Selection is available between Not Stop and Stop by Service Simulation (SIM 26-37) Setup. (If Stop is selected, the LED will flash and stop at 50K.) * Default: Not Stop * Clear: SIM 42-1	
Maintenance	Message and icon on the LCD	Selection is available among 50K, 25K, 10K, 7.5K, 5K, and free (no lighting) with SIM 21-1. * Default: 50K * Clear: SIM 20-1	
	Machine	Not stop	

*1:Installation of a new toner cartridge allows to display the remaining quantity.

3. Note for replacement of consumable parts

A. Toner cartridge

When a waste toner cartridge is removed from the machine, it must be put in a polyethylene bag to avoid scattering of toner.

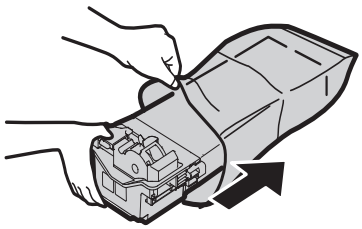

B. DV cartridge

Do not shake or put up the developer cartridge. Otherwise developer may scatter.

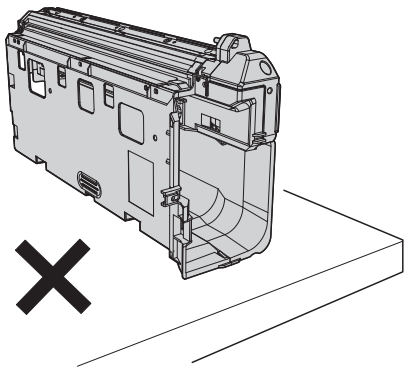

C. DV seal attachment procedure

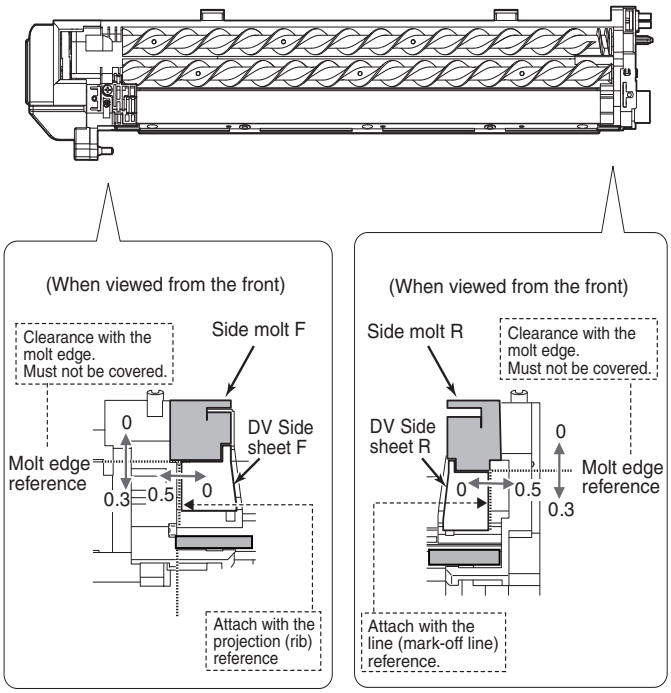

[10] DISASSEMBLY AND ASSEMBLY

WARNING Before performing the disassembly procedure, be sure to remove the power cord to prevent against an electric shock.

No.	Item
1	High voltage section/Duplex transport section
2	Optical section
3	Fusing section
4	Paper exit section
5	MCU
6	Optical frame unit
7	LSU
8	Tray paper feed section/Paper transport section
9	Bypass tray section
10	Power section
11	Developing section
12	Process section
13	Others

1. High voltage section/Duplex transport section

No.	Content
A	Transfer charger unit
B	Charger wire
C	Duplex transport section

A. Transfer charger unit

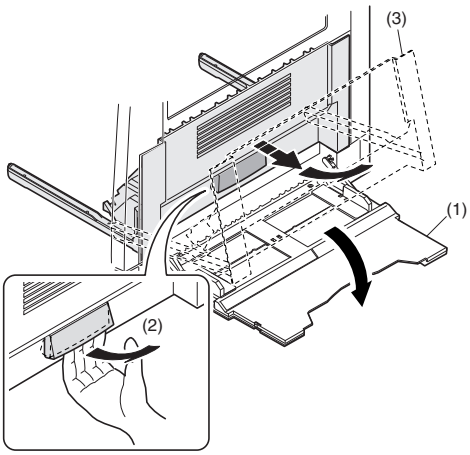

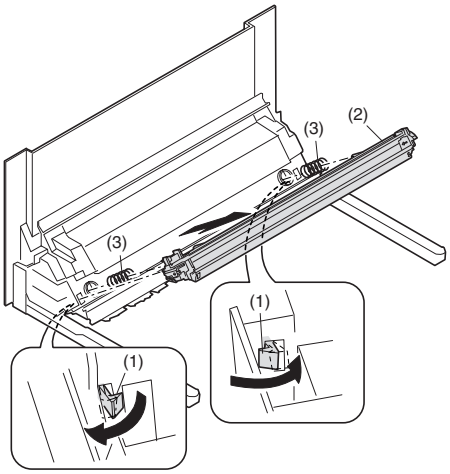

B. Charger wire

Installation: The spring tip must be between two reference ribs.

•The charger wire must be free from twists or bending.

•Be sure to put the charger wire in the V groove.

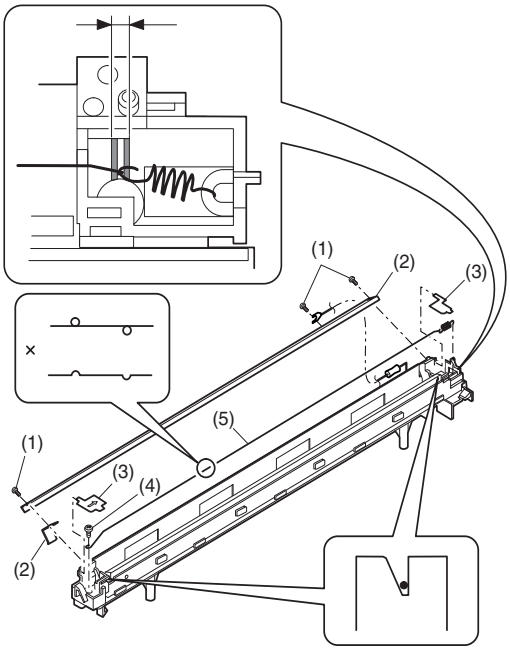

C. Duplex transport section

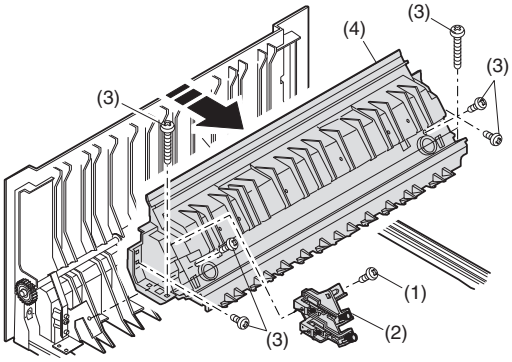

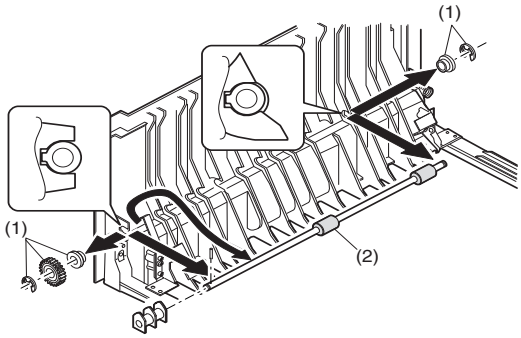

2. Optical section

Note: When disassembling or assembling the optical unit, be careful not to touch the mirror and the reflector.

No.	Content
A	Table glass
B	Copy lamp unit
C	Inverter PWB for copy lamp
D	Copy lamp
E	Lens unit
F	Wire
G	Document detection

A. Table glass

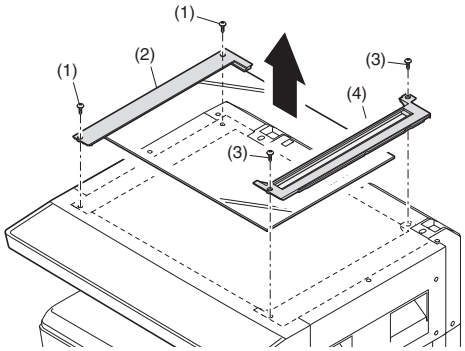

B. Copy lamp unit

Disassembly: Be sure to put No. 2/3 mirror unit to the positioning plate (A).

Assembly: Put the notched surface of wire holder (3) downward, tighten temporarily, and install.

Adjustment: Main scanning direction distortion balance adjustment

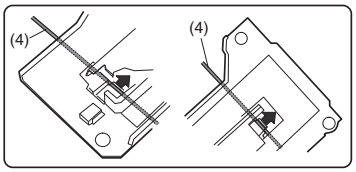

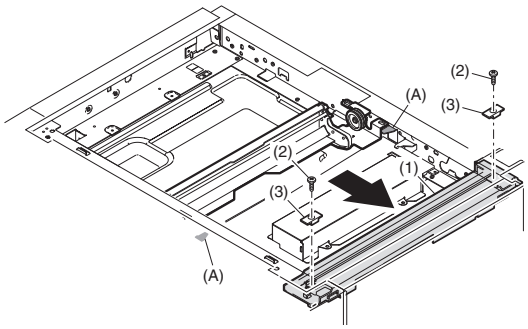

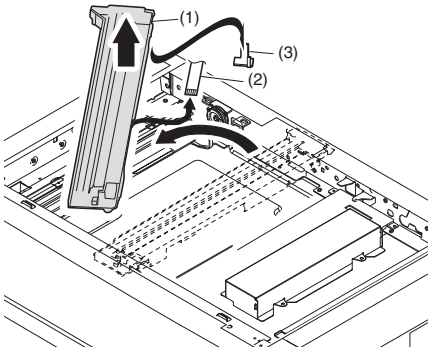

C. Inverter PWB for copy lamp

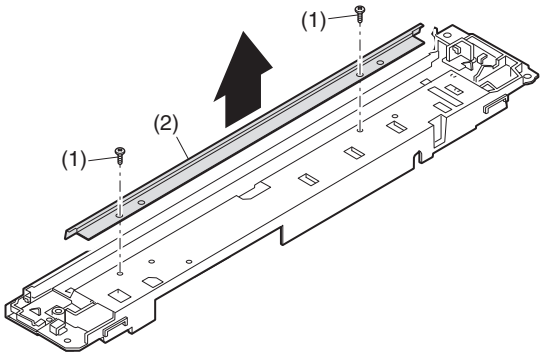

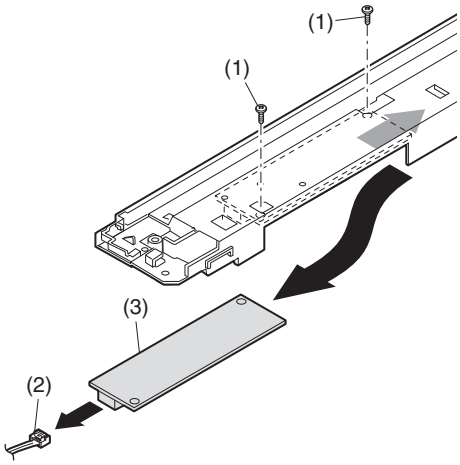

D. Copy lamp

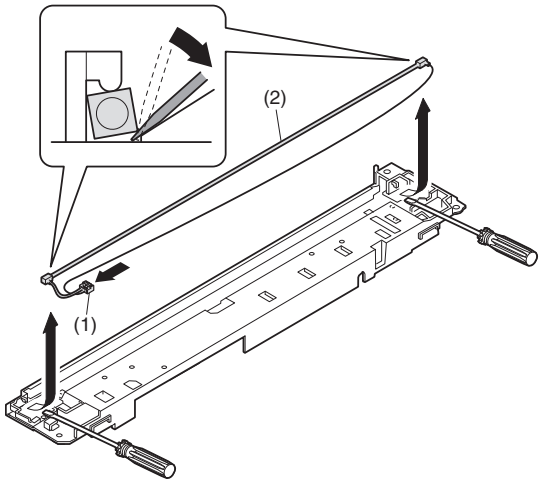

E. Lens unit

Note: Do not remove screws which are not indicated in the figure. If the height of the base plate is changed, it cannot be adjusted in the market.

Note: The CCD/lens unit is factory-adjusted before shipping.
Since these adjustments cannot be performed in the market.
Never touch the screws other than screw 2) of the CCD/lens unit.

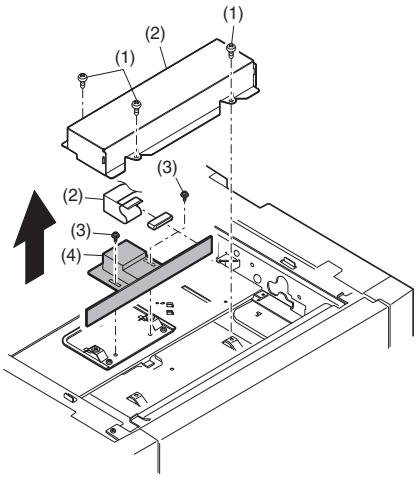

Lens unit attachment

<1> Remove the document table glass.
<2> Remove the dark box cover.
<3> To prevent against shift of the CCD unit optical axis, mark the CCD unit base as shown below.

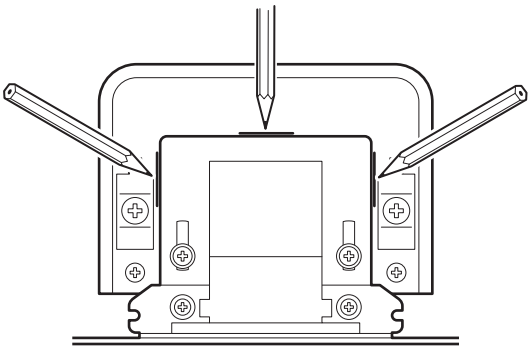

Note: This procedure must be executed also when the CCD unit is replaced.

<4> Loosen the CCD unit fixing screws.

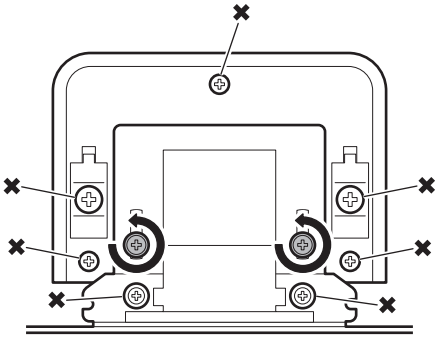

Note: Never loosen the screws marked with X.
If any one of these screws is loosened, the position and the angle of the CCD unit base may be changed to cause a problem, which cannot be adjusted in the market. In that case, the whole scanner unit must be replaced.

<5> Slide the CCD unit in the arrow direction (CCD sub scanning direction) to change the installing position.
When the copy image is longer than the original scale, shift the CCD unit in the direction B. When the copy image is shorter than the original scale, shift the CCD unit in the direction A.
One scale of mark-off line corresponds to 0.2%.
At that time, fix the CCD unit so that it is in parallel with the scale on the front and the rear side of the CCD unit base.

Note: Fix the CCD unit so that it is in parallel with the line marked in procedure <3>.

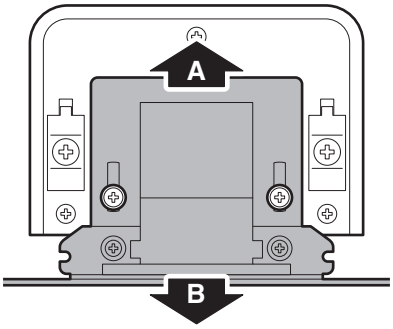

<6> Make a copy and check the copy magnification ratio again.
If the copy magnification ratio is not in the range of 100 ± 1%, repeat the procedures of <3> - <5> until the condition is satisfied.

F. Wire

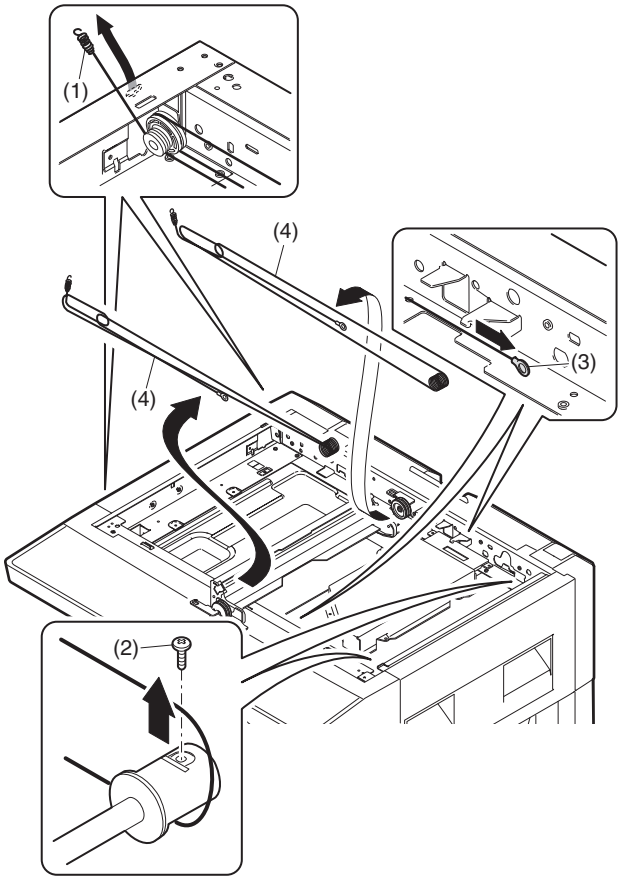

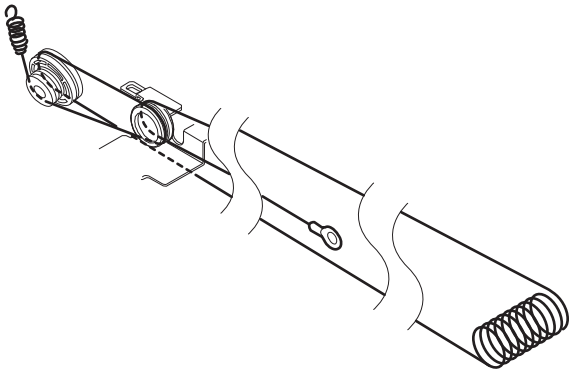

G. Document detection

• For inch series

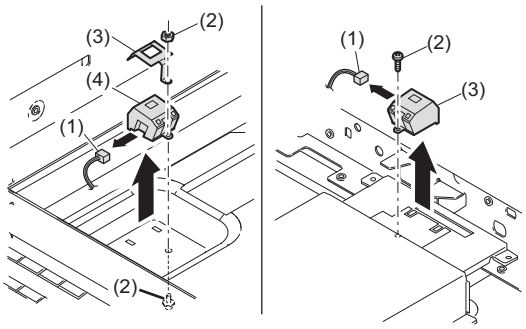

• For AB series

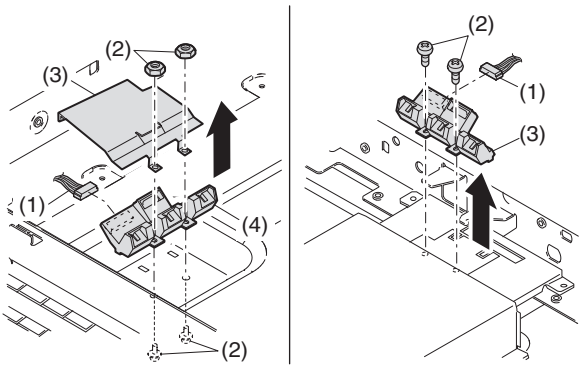

3. Fusing section

No.	Contents
A	Fusing unit
B	Thermostat
C	Thermistor
D	Heater lamp
E	Upper heat roller
F	Separation pawl
G	Lower heat roller
H	Separation pawl

A. Fusing unit removal

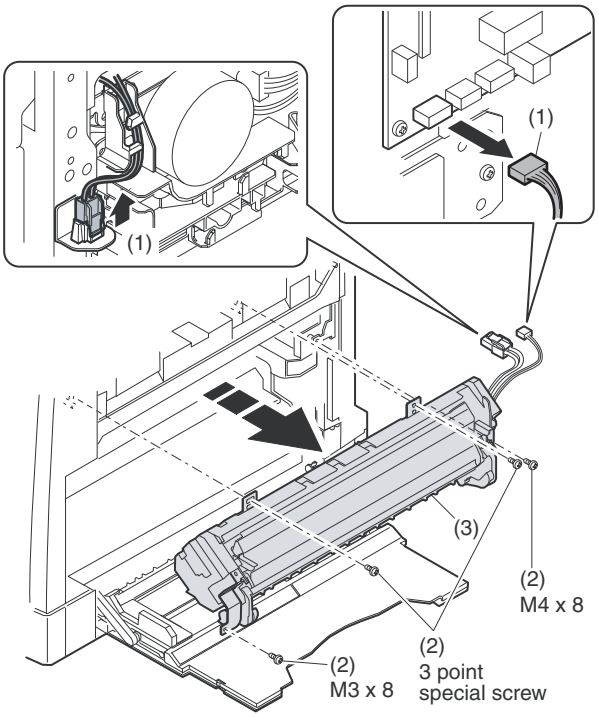

B. Thermostat

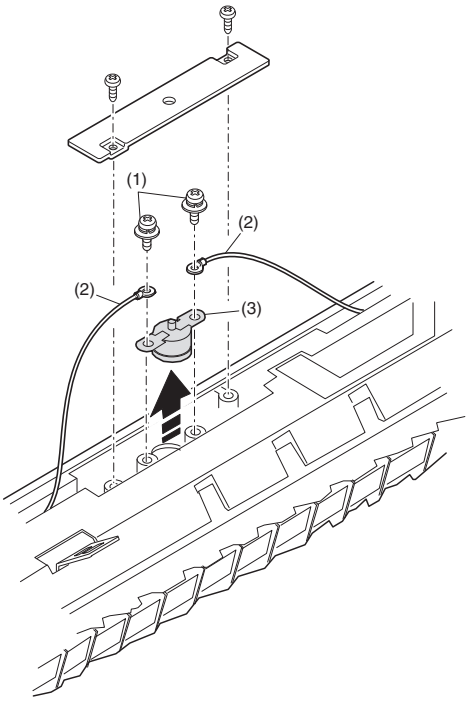

C. Thermistor

Installation: Install in direction that the sponge side (A) of the thermistor comes in contact with heat roller.
Check that the thermistor is in contact with the upper heat roller.

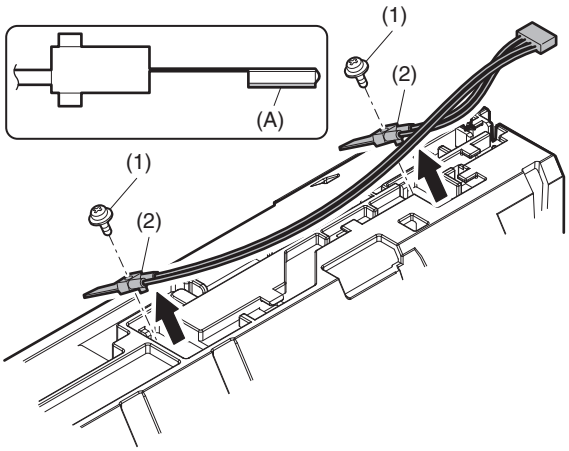

D. Heater lamp

Assembly: Insert the spring (A) into the hole (B) in the fusing frame.

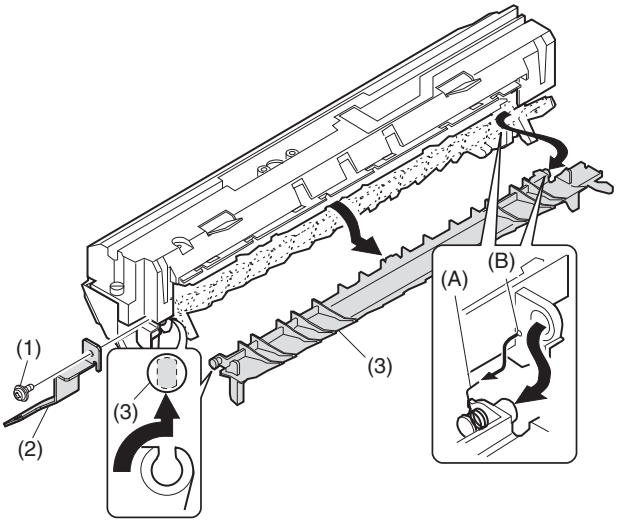

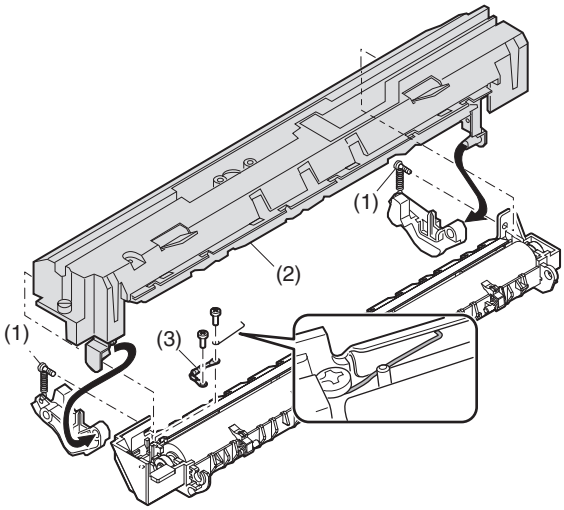

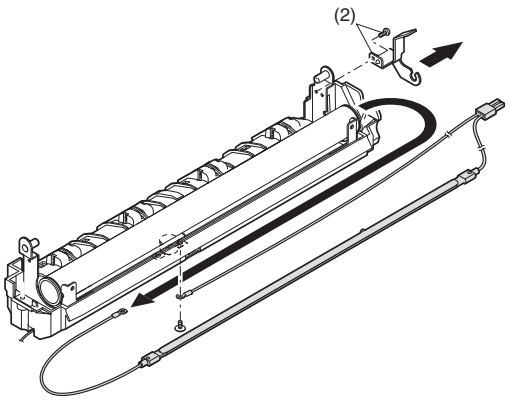

Assembly: Put the fusing harness (A) on the heater lamp (B) as shown in the figure and fix them together.<R>Place the fusing harness inside the rib (C).

E. Upper heat roller

Disassembly: There are three pawls on the fusing cover. Remove the screws and slide the fusing cover to the right to remove.
The heater lamp is fixed on the fusing cover with a screw. Slide the fusing cover to the front and remove the screw, then remove the heater lamp.

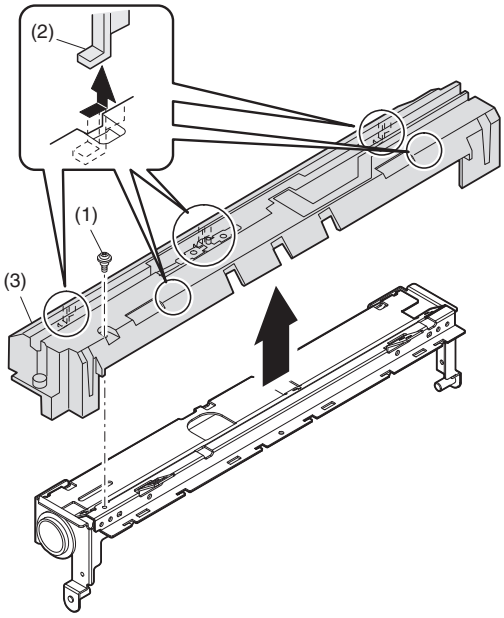

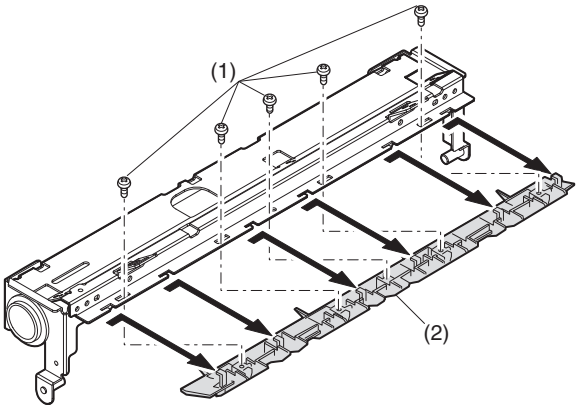

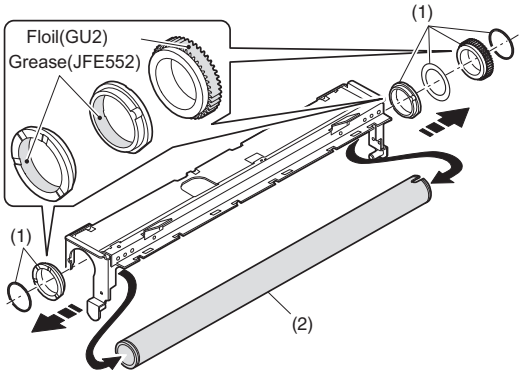

Note: It is grease (JFE552) application on a fusing frame metal plate part. (Degree to thinly)

F. Separation pawl

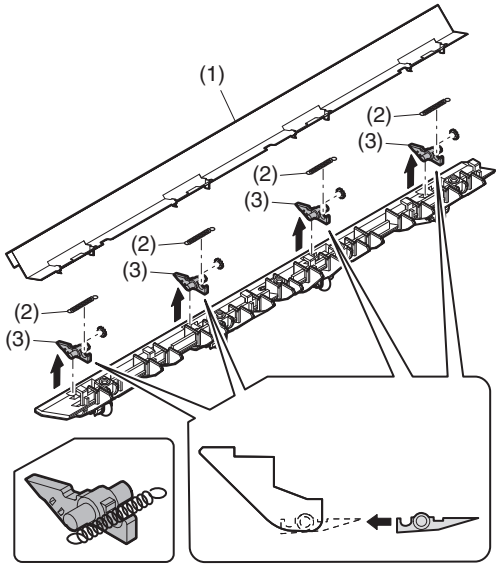

G. Lower heat roller

Assembly: When assembling the fusing front paper guide (3), temporarily fix the paper guide fixing plate with the screw so that the paper guide fixing plate (2) is in contact with the fusing lower frame bottom (A).
Align the edge (B) of the fusing front paper guide (3) with the top (C) of the rib, and fix them securely with screws.

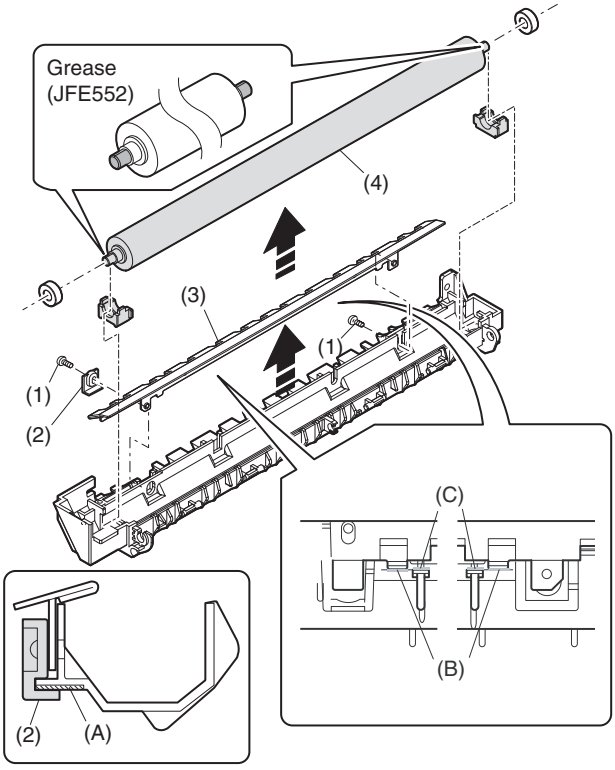

Note: I apply grease (JFE552) to a fusing lower frame, lib.

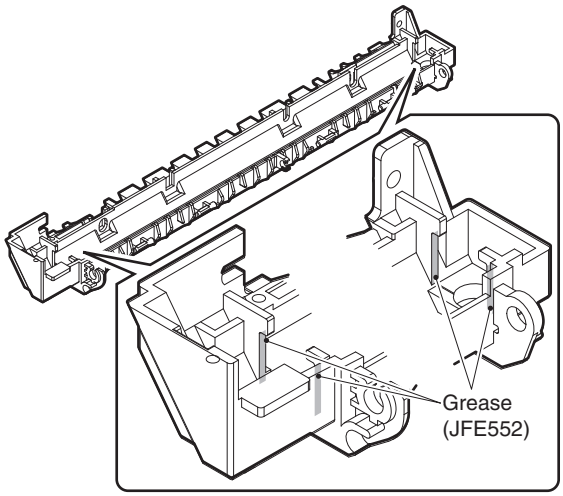

H. Separation pawl

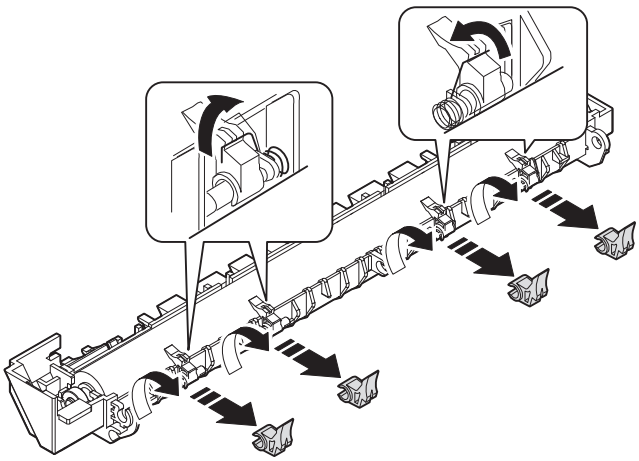

4. Paper exit section

No.	Content
A	Ozone filter
B	Cooling fan
C	Paper exit unit
D	Paper exit sensor / duplex sensor
E	Transport roller
F	Paper exit roller
G	Paper exit interface PWB

A. Ozone filter

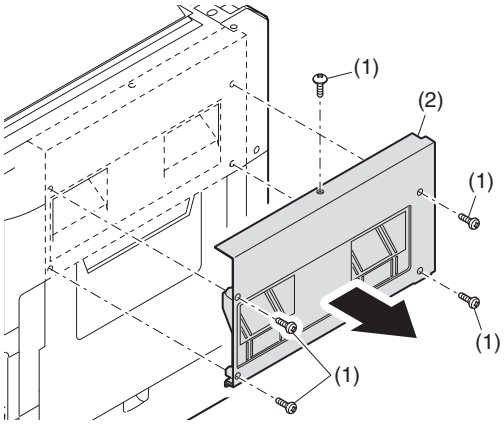

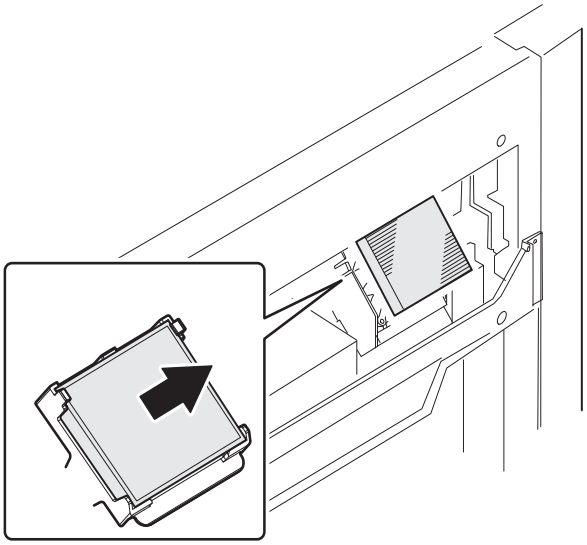

B. Cooling fan

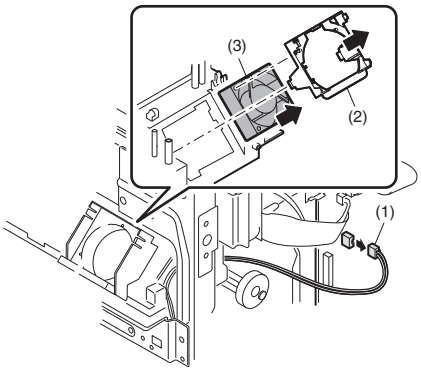

C. Paper exit unit

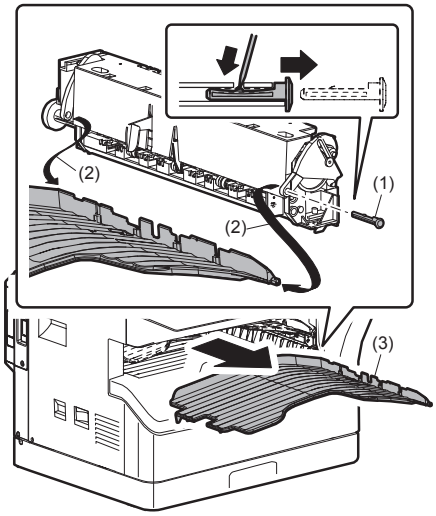

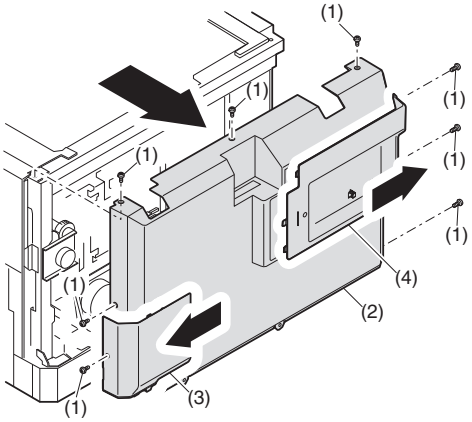

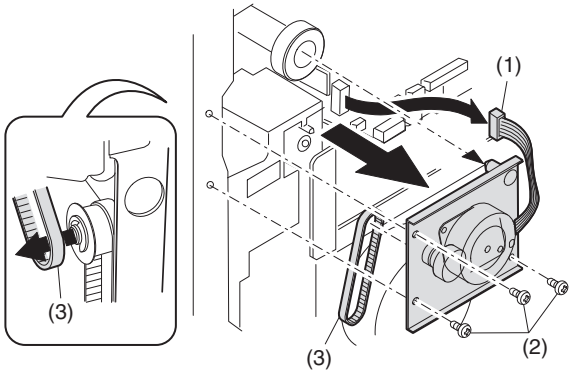

(A) Simplex

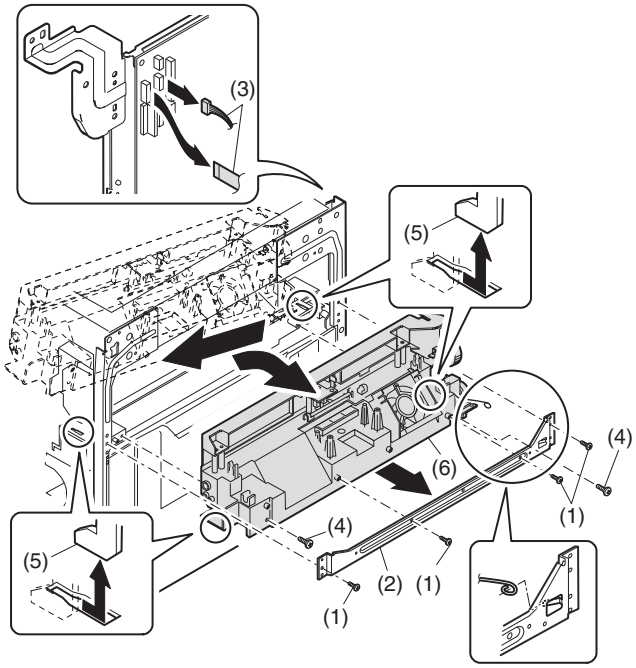

(B) Duplex sensor

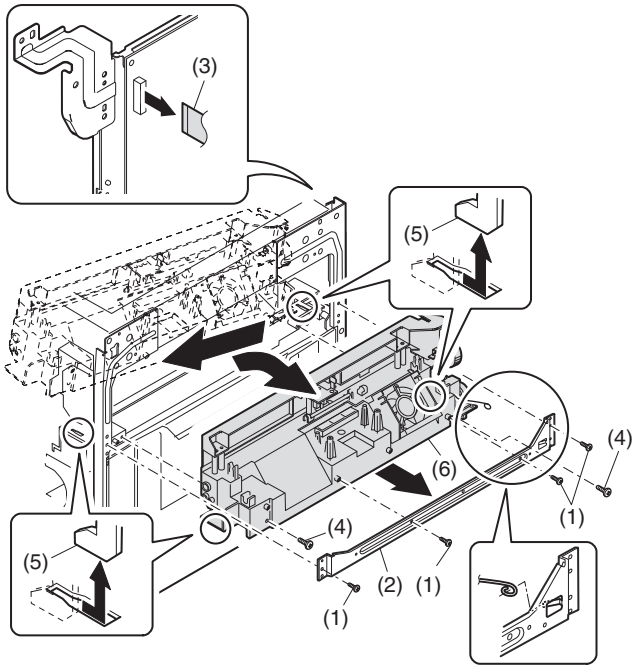

D. Paper exit sensor / duplex sensor

(A) Paper exit sensor

(B) Duplex sensor

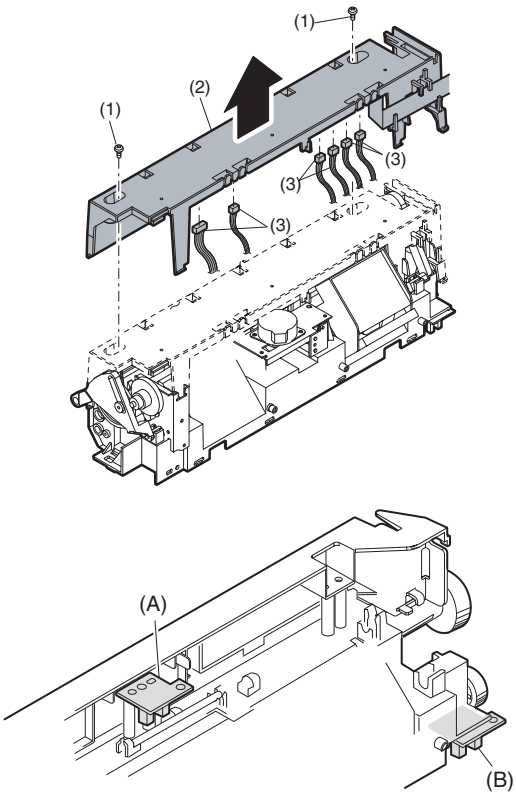

E. Transport roller

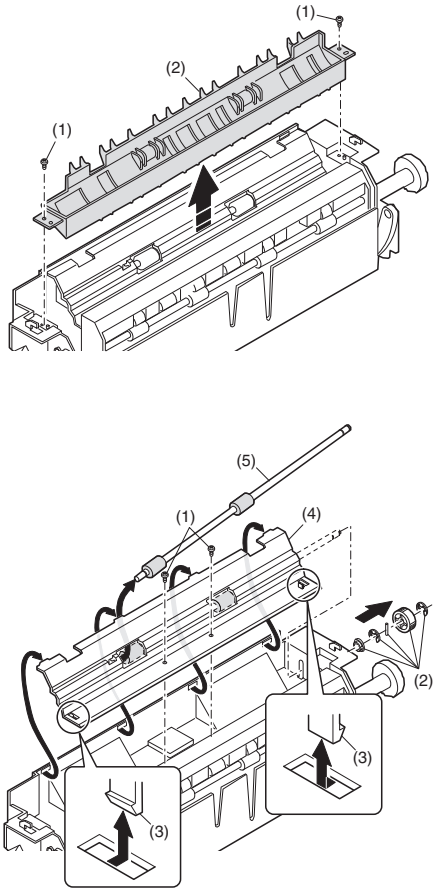

F. Paper exit roller

Assembly: Insert the spring pin so that the waveform (A) of the spring pin faces in the longitudinal direction of the paper exit drive gear long hole (B).
Be sure to insert two ribs (C) into the groove (D).

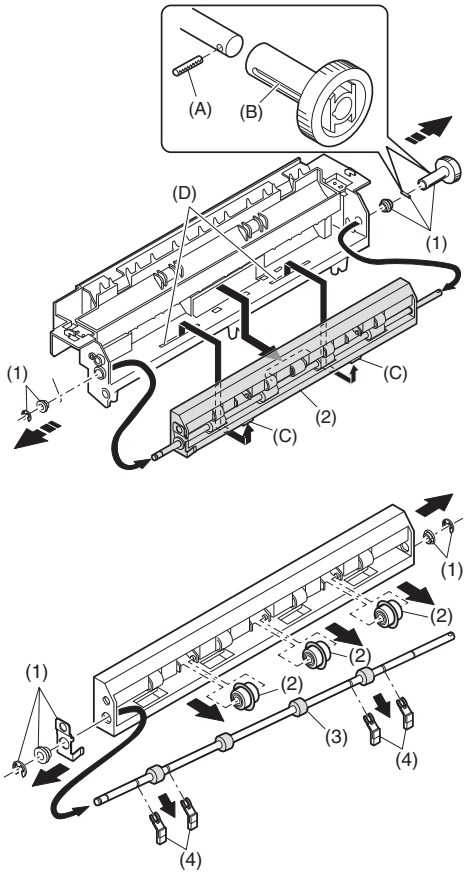

G. Paper exit interface PWB

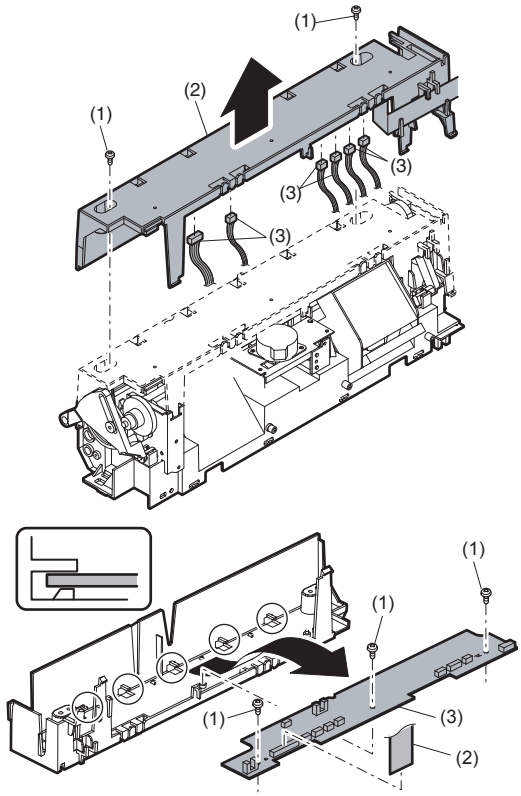

5. MCU

No.	Content
A	MCU disassembly

A. MCU disassembly

Disassembly: The connector, the harness, and the screw are removed.

Note: When replacing the MCU PWB, be sure to replace the EEPROM of the MCU PWB to be replaced.

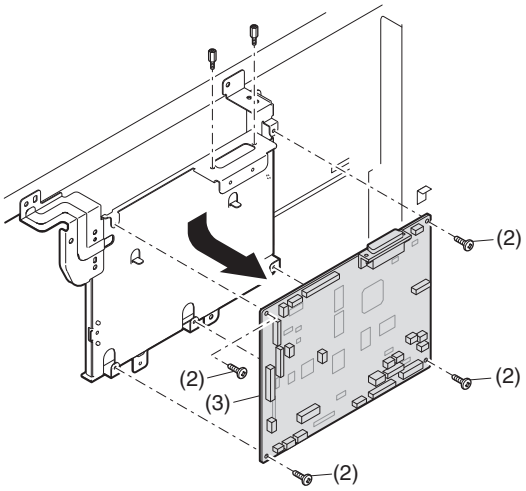

6. Optical frame unit

No.	Content
A	Optical frame unit

A. Optical frame unit

Installation: Install the optical unit in the sequence shown above.

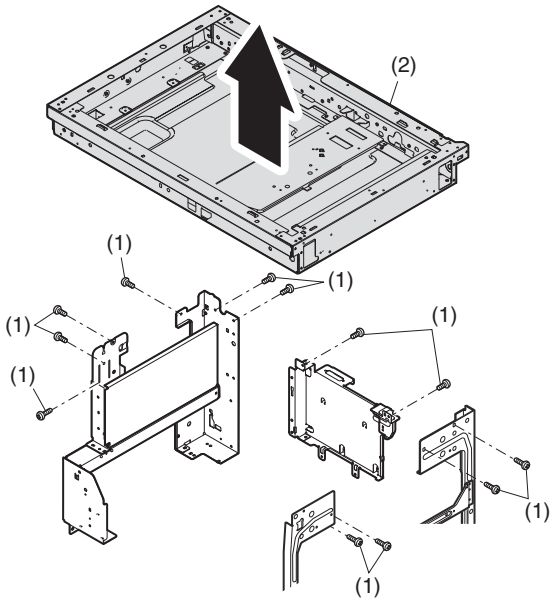

7. LSU

No.	Content
A	LSU unit

A. LSU unit

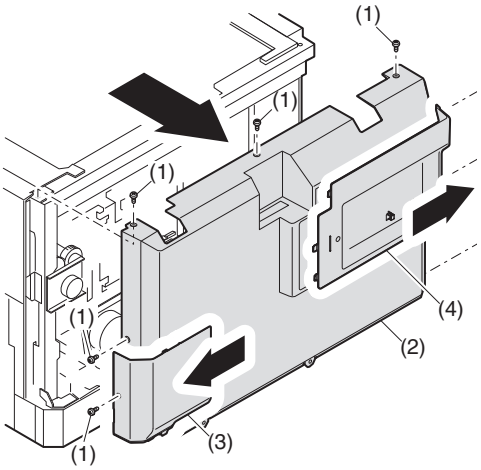

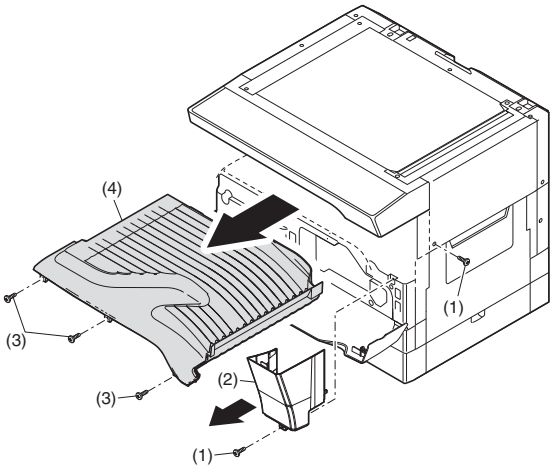

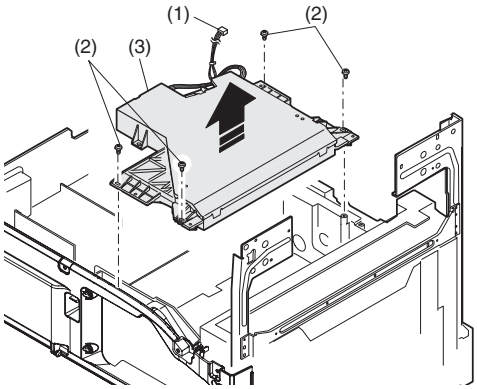

Note: Do not disassemble the LSU.

Note: When replacing the LSU, be careful not to touch the dust-shield glass.

Note: Turn OFF the machine power, anddisconnect the power plug from the power outlet.

Adjustment:

•Image lead edge position adjustment

•Image left edge position adjustment

•Paper off-center adjustment

8. Tray paper feed section/Paper transport section

No.	Content
A	Drive unit
B	PS clutch/Resist roller
C	Paper feed clutch/Paper feed roller
D	Connection gear unit

A. Drive unit

Assembly: When assembling, be sure to check that the clutch rotation stopper is securely engaged in the frame.

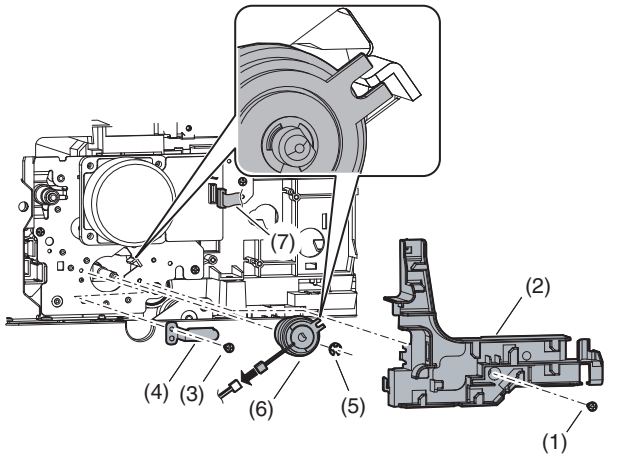

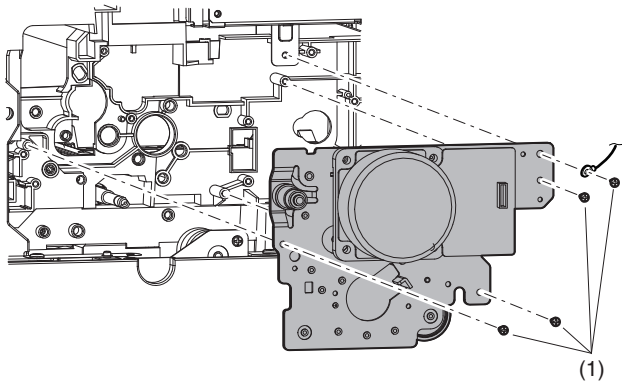

B. PS clutch/Resist roller

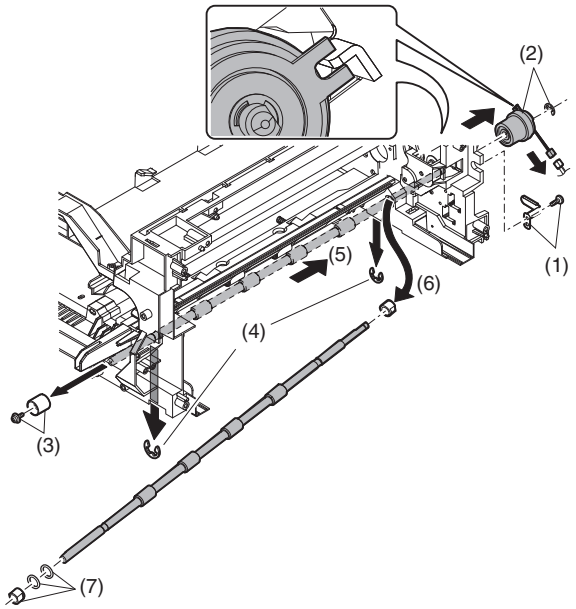

C. Paper feed clutch/Paper feed roller

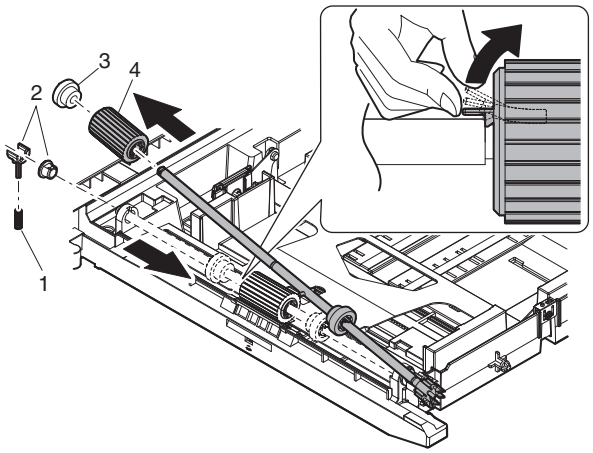

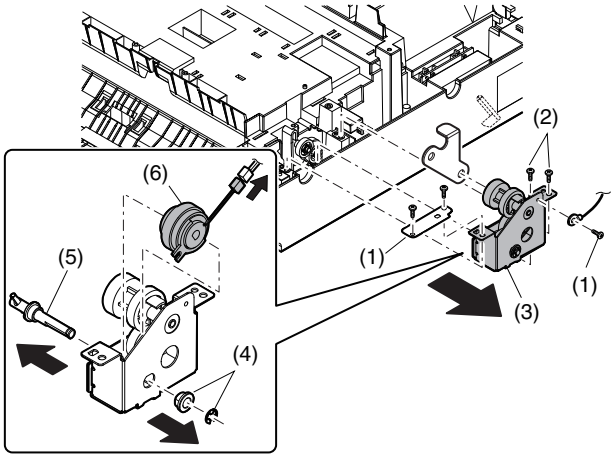

D. Connection gear unit

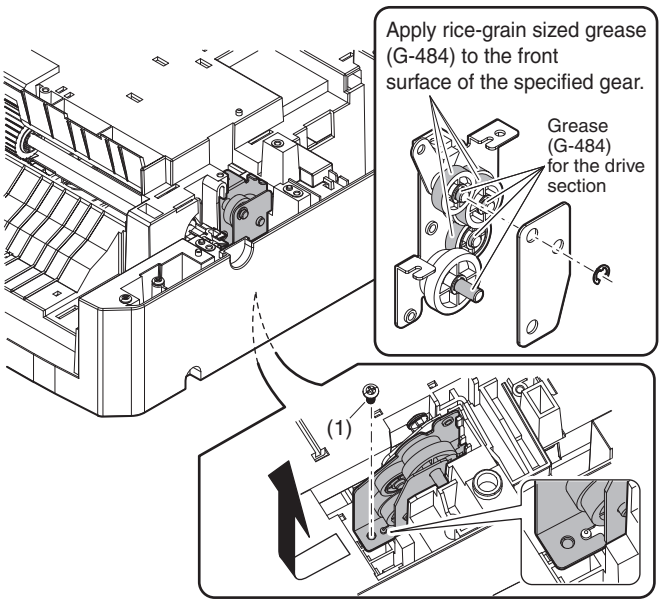

9. Bypass tray section

No.	Content
A	Bypass tray transport roller/Bypass tray paper feed roller
B	Bypass tray paper feed
C	Bypass tray solenoid
D	Bypass tray transport clutch
E	Bypass tray paper feed clutch
F	Pressure plate unit

A. Bypass tray transport roller/Bypass tray paper feed roller

Note: Push the lever at the right edge of the multi frame cover to the right upper side and remove it.

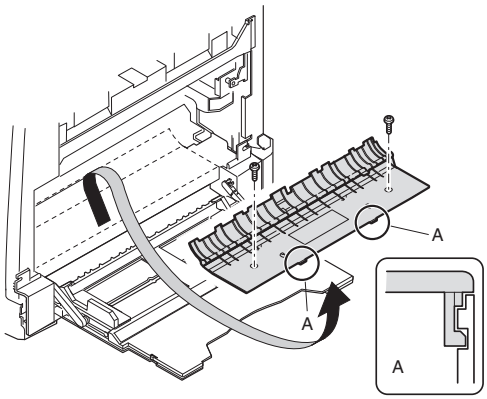

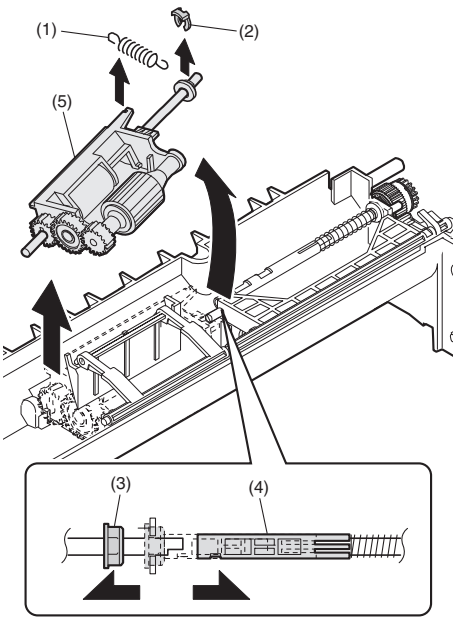

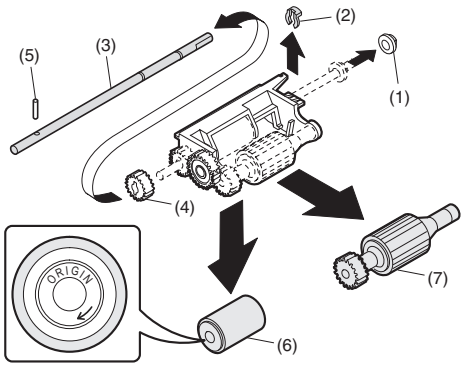

Installation: Be careful of the installing direction of the bypass tray transport roller (6)

B. Bypass tray paper feed

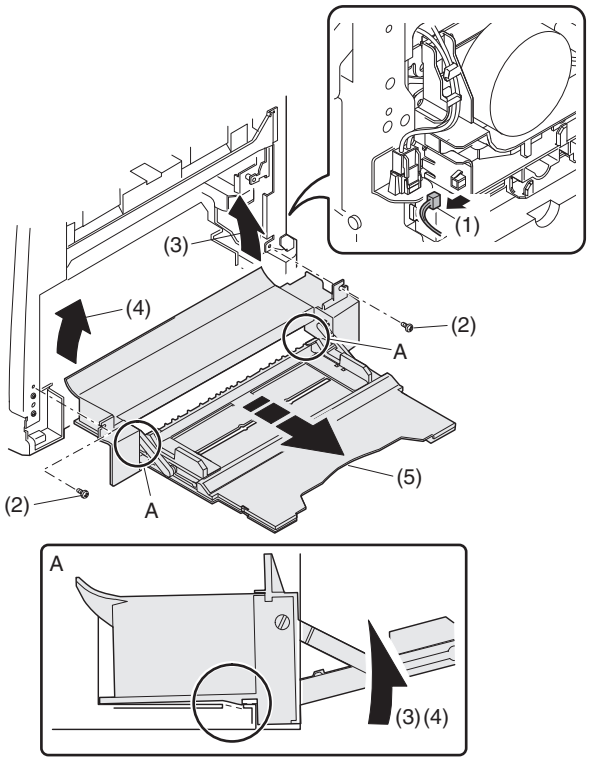

C. Bypass tray solenoid

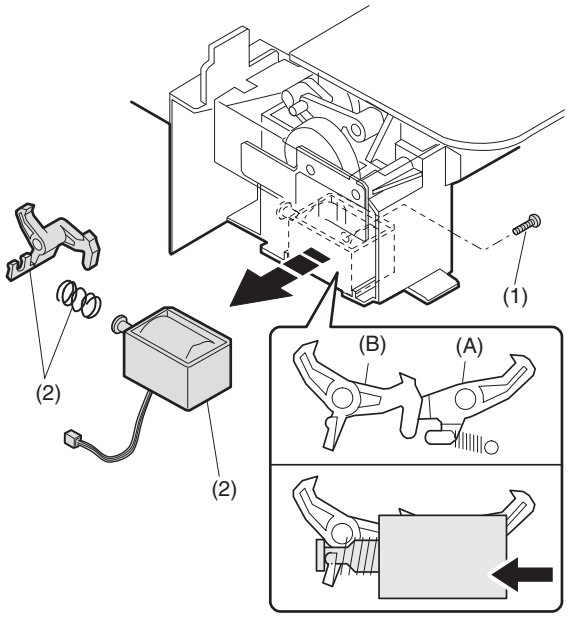

When installing the solenoid, shift it in the arrow direction and install.

D. Bypass tray transport clutch

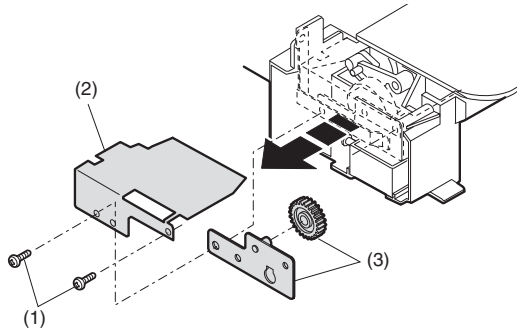

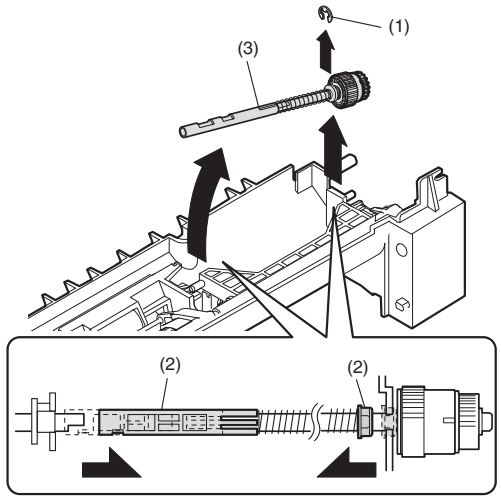

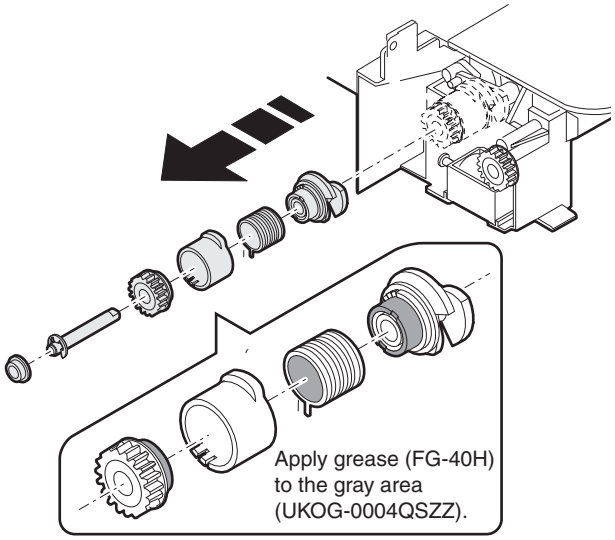

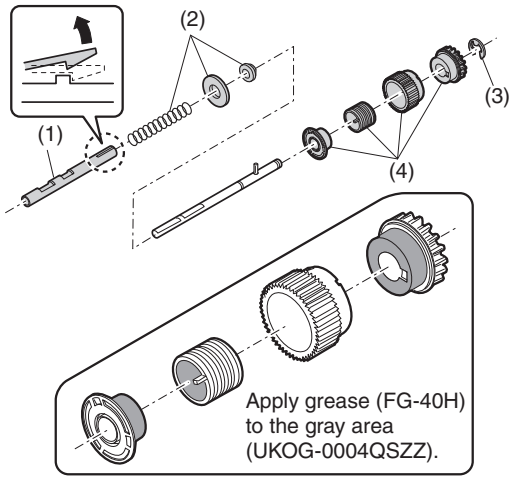

Apply grease (FG-40H) (UKOG-0004QSZZ).

E. Bypass tray paper feed clutch

Note: Push the lever at the right edge of the multi frame cover to the right upper side and remove it.

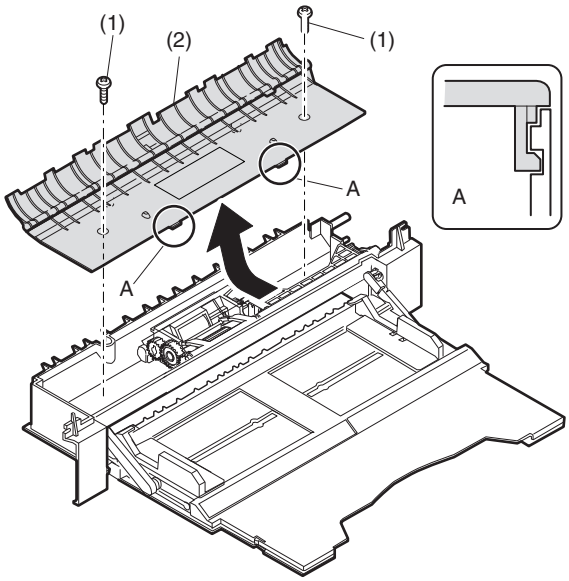

F. Pressure plate unit

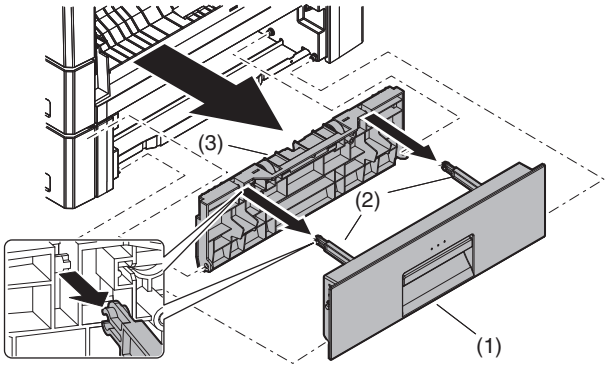

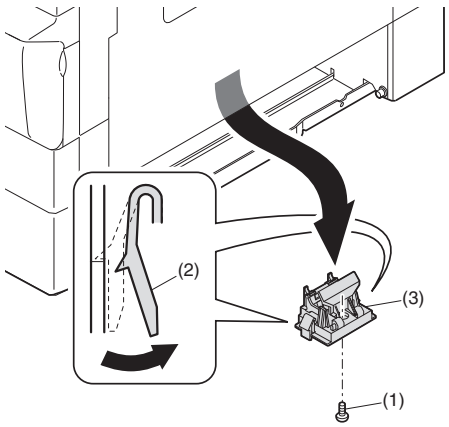

10.Power section

No.	Content
A	Power unit
B	High voltage P.W.B.
C	Power P.W.B.
D	Power switch

A. Power unit

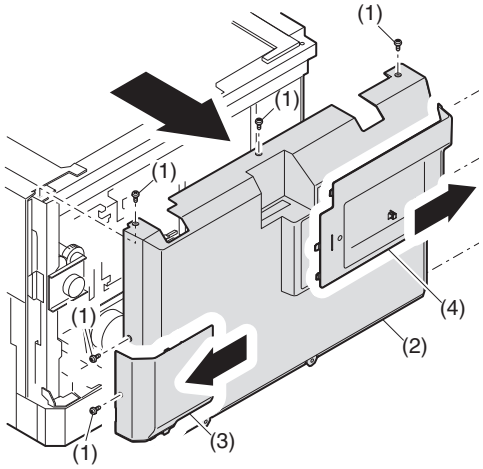

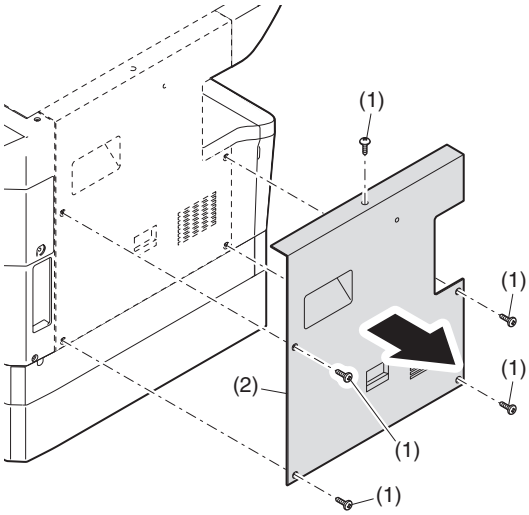

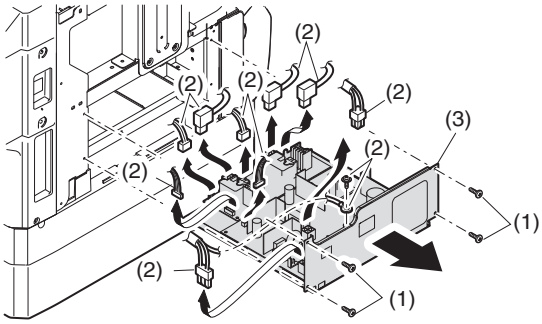

B. High voltage P.W.B.

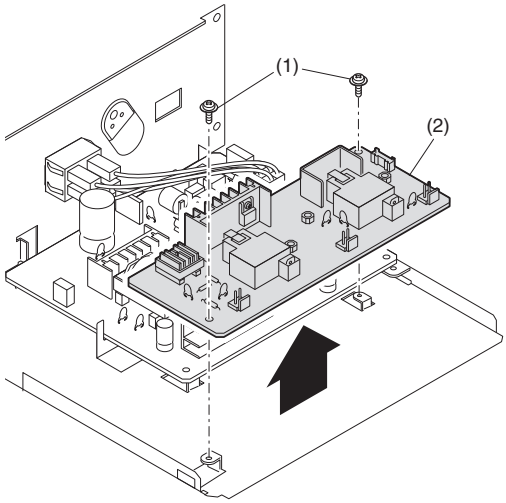

C. Power P.W.B.

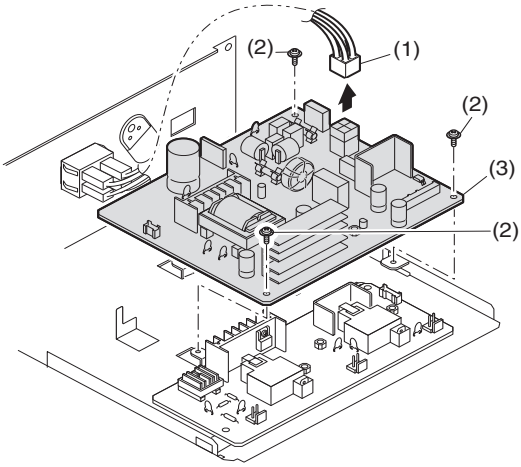

D. Power switch

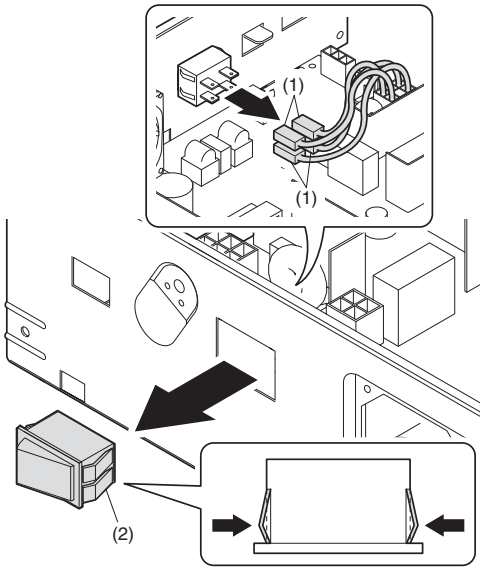

11.Developing section

No.	Contents
A	Developing box
B	Developing doctor
C	MG roller

A. Developing box

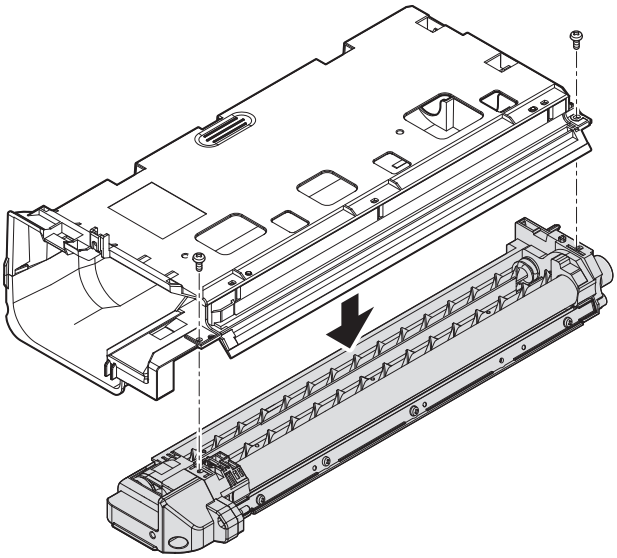

B. Developing doctor

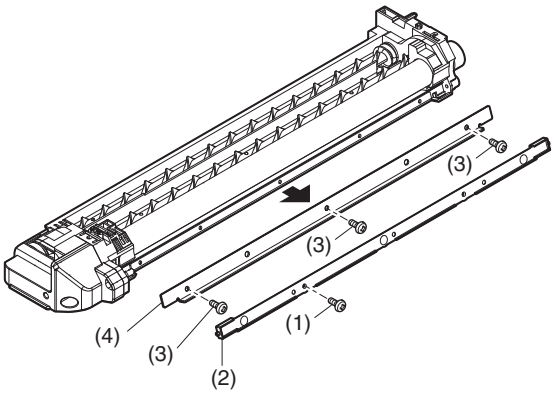

Adjustment: Developing doctor gap adjustment

C. MG roller

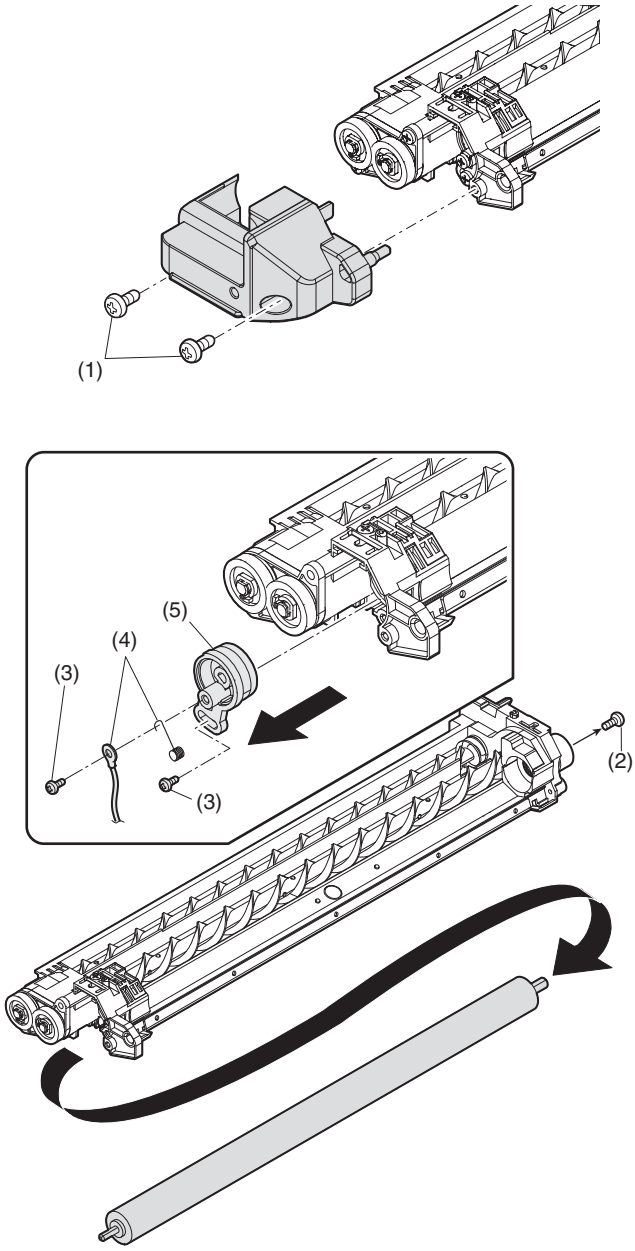

Adjustment: MG roller main pole position adjustment

Note: Attach it to fit with the attachment reference when replacing the DV blade.

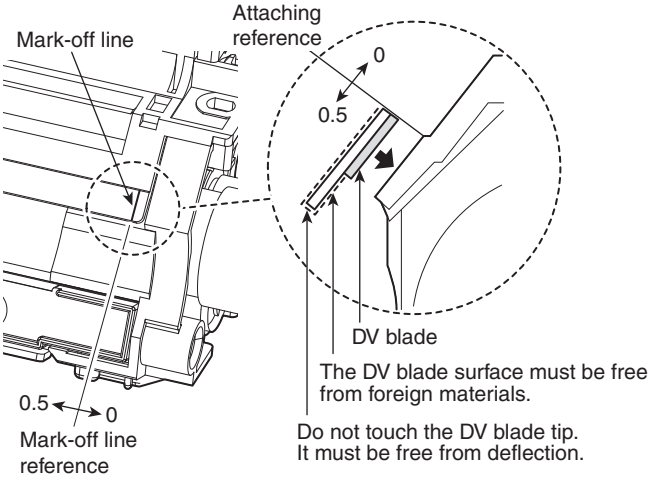

12.Process section

No.	Contents
A	Drum unit
B	Main charger unit
C	Cleaning blade

A.Drum unit

When removing the drum, put the drum unit upside down to prevent waste toner from spilling.

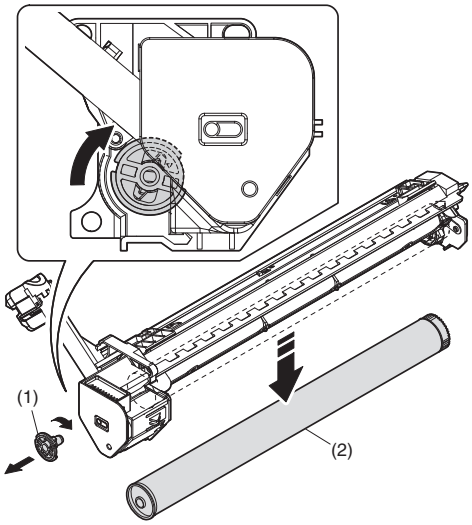

When the drum is replaced, be sure to replace the drum positioning boss with a new one, too.

(Note for servicing the OPC drums)

1. Prevention of oily dirt attachment

[Note]

- Be careful not to attach fingerprints or oily dirt on the OPC drum surface. (Keep the unit away from oils and dust.)
- When replacing the OPC drum, cover the OPC drum with the protection sheet and hold the protection sheet.
  If it is required to hold the OPC drum directly, use enough care not to touch the cleaning blade area, 5mm inside from both edges of the OPC drum. (If a fingerprint or oily dirt is attached to the cleaning blade area of the OPC drum, the cleaning blade may flip.)

[Countermeasures]

If a fingerprint is attached to the OPC drum surface erroneously, perform the following countermeasures.

1) Use dry cloth to clean and remove the dirt.
2) Apply KYNAR to prevent blade flip.

[Check method]

Check to confirm that the OPC drum is free from fingerprints or oily dirt and that the cleaning blade is completely cleaned by the following method.

- Make a print of a half tone image on all the surface of A4 (11" x 8.5") paper, and check the printed paper for any abnormality in the image.

2. Prior exposure prevention

[Note]

- Avoid servicing in a place where there is strong light.
- Do not expose the unit to light for a long time.
- Cover the OPC drum with light-blocking material. (When using paper, use about 10 sheets of paper to block light.)

[Countermeasures]

If the OPC drum is erroneously exposed to light too much (prior exposure), perform the following countermeasures.

1) Print half tone images on the whole surface of A4 (11" x 8.5") paper, and check to confirm that there is no irregular density area in the previously exposed section.
2) Damages due to prior exposure may be recovered by keeping the OPC drum for several hours. If, however, image are not recovered, replace the OPC drum.

B. Main charger unit

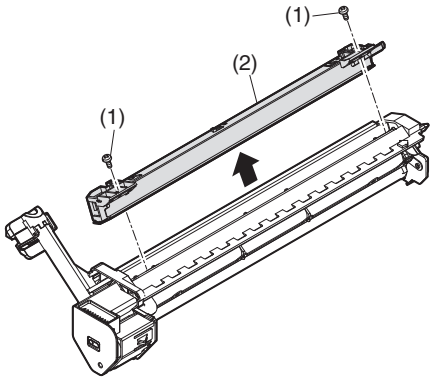

C. Cleaning blade

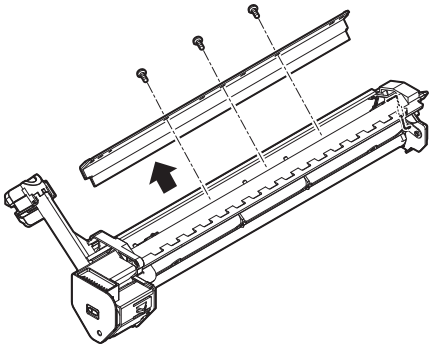

13.Others

No.	Contents
A	Operation P.W.B.
B	Tray interface P.W.B.
C	2nd tray paper entry sensor / Paper empty sensor
D	2nd tray transport clutch
E	2nd tray transport roller
F	2nd tray paper feed clutch
G	Main motor
H	Paper entry sensor
I	Paper empty sensor

A. Operation P.W.B.

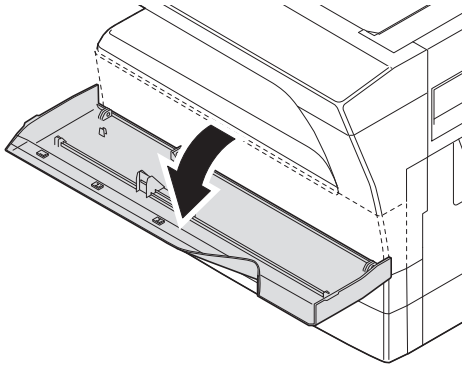

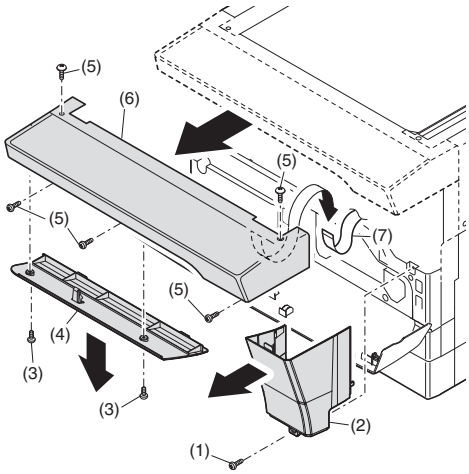

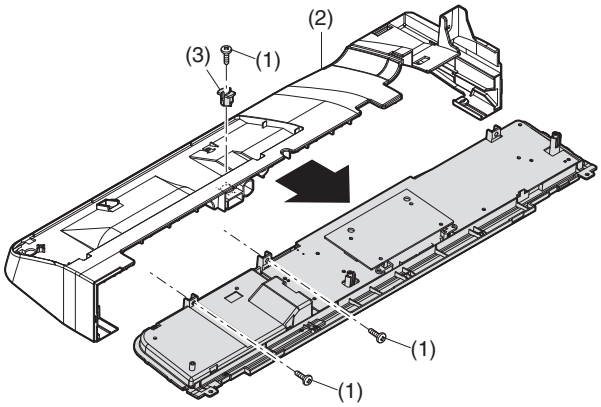

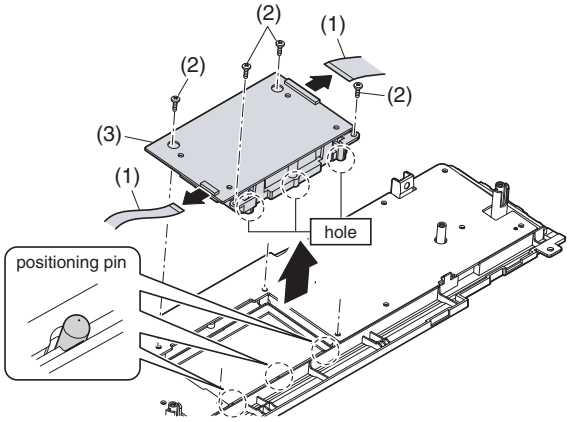

[Note for installation]

When installing, engage the hole of the LCD box unit with the positioning pin.

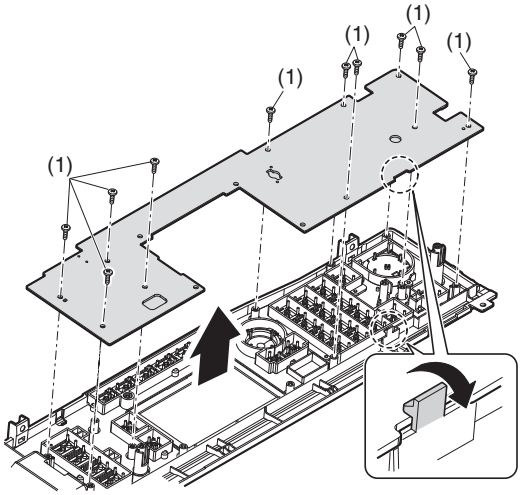

B. Tray interface P.W.B.

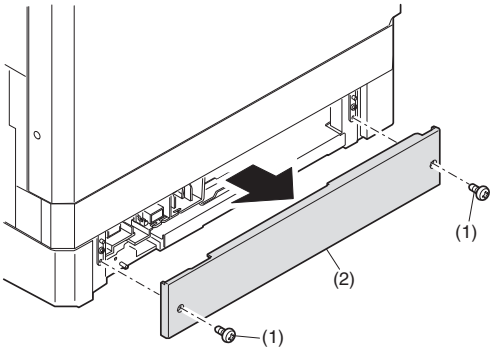

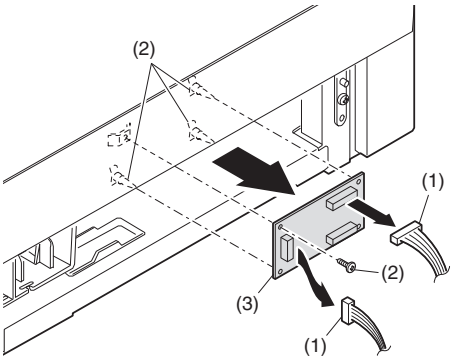

C. 2nd tray paper entry sensor / Paper empty sensor

Disassembly: When the second paper feed unit is detached, the screw is removed, and the main body is lifted.

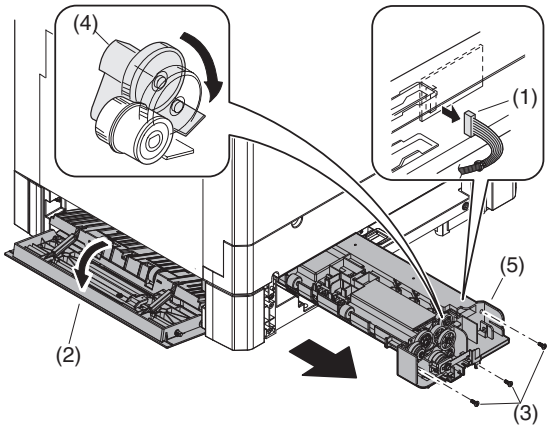

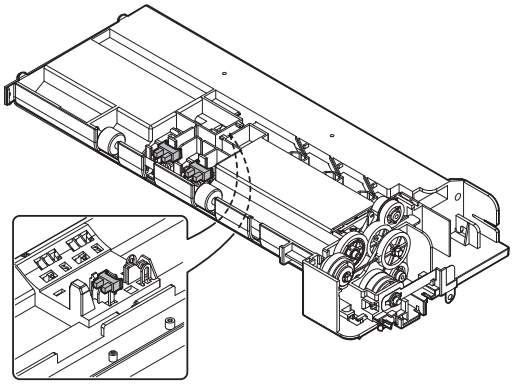

D. 2nd tray transport clutch

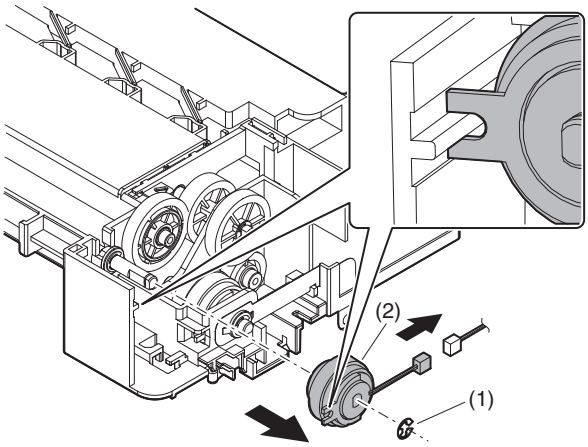

E. 2nd tray transport roller

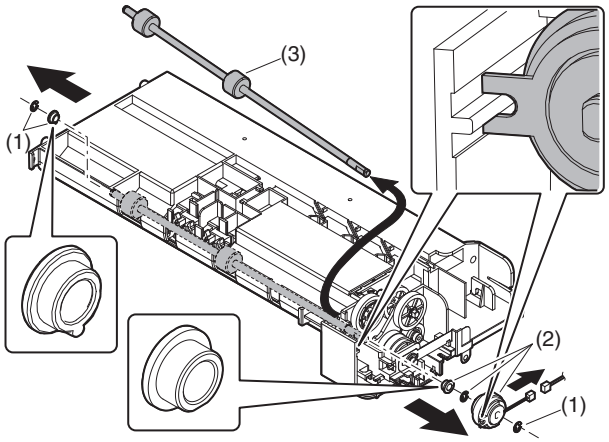

F. 2nd tray paper feed clutch

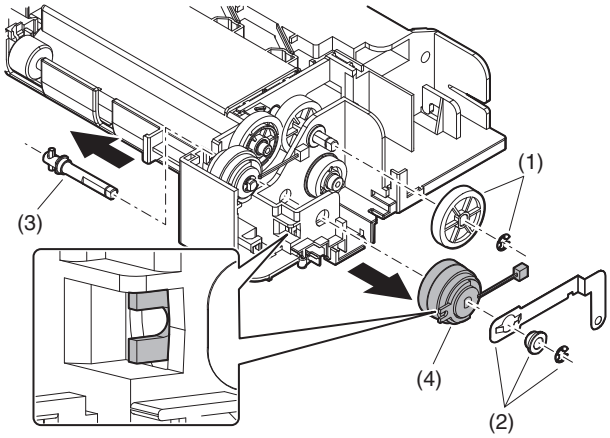

G. Main motor

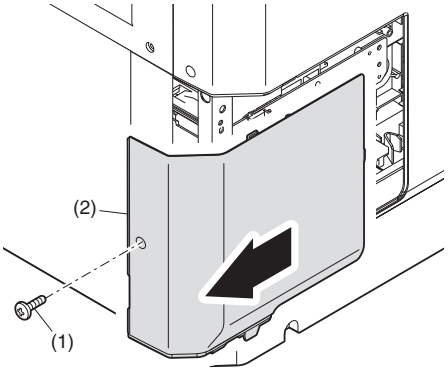

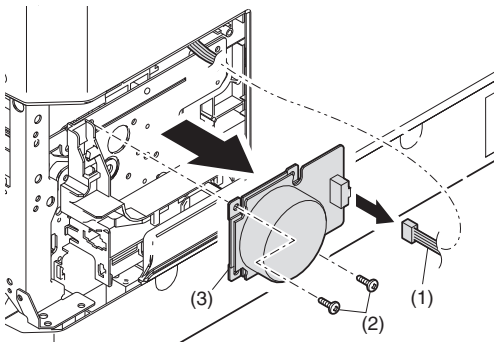

H. Paper entry sensor

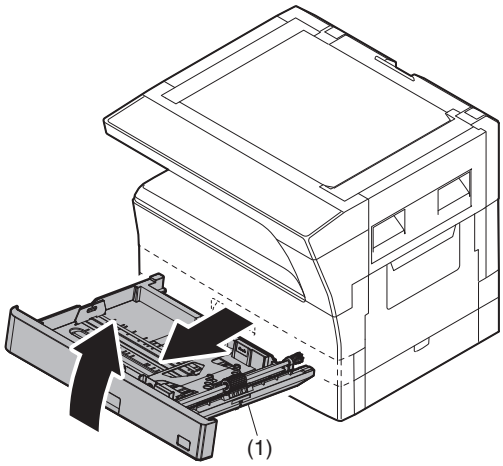

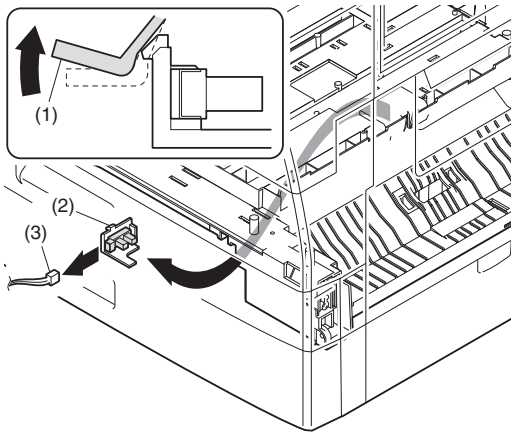

I. Paper empty sensor

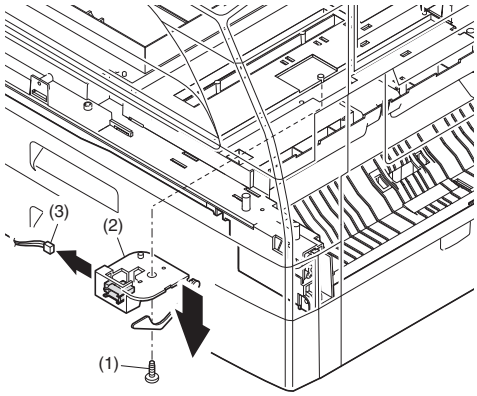

[11] OPERATIONAL DESCRIPTIONS

1. Paper feed operation

- When copy/print movement is started, a main motor is a timing of the rotary (drive system) paper pickup, and a paper feed clutch does ON, and a paper feed roller turns.
- A transportation clutch does ON, and the paper is sent to the transportation department.

* By a separation plate to prevent against double feed of paper.

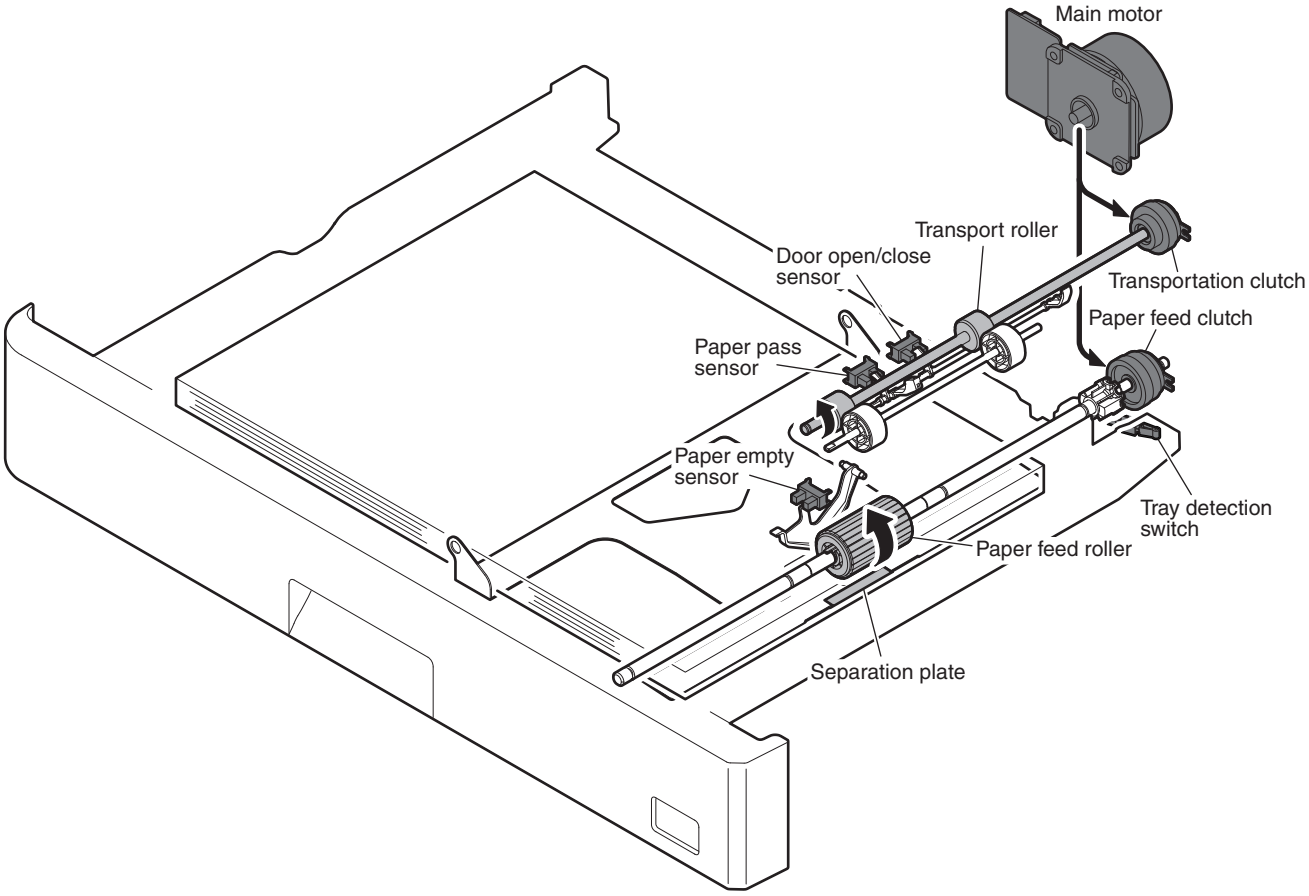

[12] FLASH ROM VERSION UP PROCEDURE

1. Preparation

Write the download data (the file with the extension dwl) to the main body.

Necessary files for download

- Maintenance.exe (Maintenance software)
- ProcModelH.mdl.SE
- ProcModelH.ini.SE
- ProcModelH.fmt.SE
- SFAXNoXXX.fld
- Mainte.inf
- Usbscan.sys
- Download file:***.dwl

<Note>

- The Download file(***.dwl) and the like that are to be downloaded should be copied, in advance, into folders that have a maintenance program.
- When creating a folder for a maintenance tool in the PC, be sure that no lengthy folder name is included in the path.

(Example)
Incorrect c:\Maintenance Download Tool
Correct c:\Maintenance\Downtool

2. Download procedure

1) Main body side:
Executable by performing the Service Simulation No. 49-01 (Flash Rom program-writing mode).
(A word "Download mode." appears on the operation panel to denote the download mode status.)

2) Connect the PC and the main body with the download cable (USB cable).

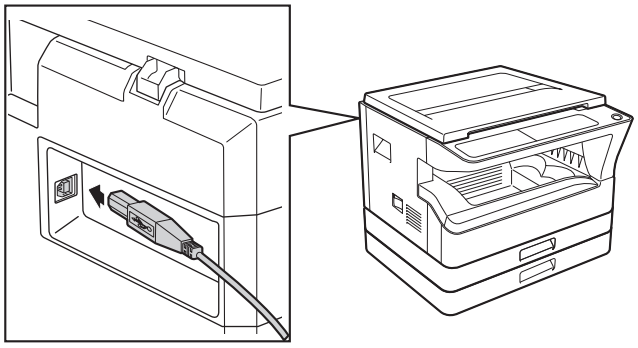

3) PC side:
Boot the maintenance program. Select the model icon.

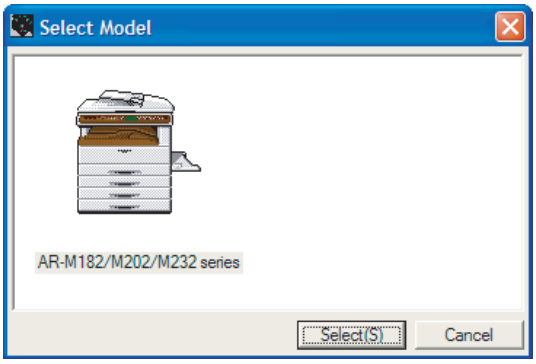

<Sample display>

4) PC side:
Confirm that the "Simulation Command List" tree is displayed on the maintenance program.

5) PC side:
When the message "the copier is off" is displayed on the lowest area of the figure below after the "maintenance program" is started up, select the "File" and then "Reconnect" in the menu bar.

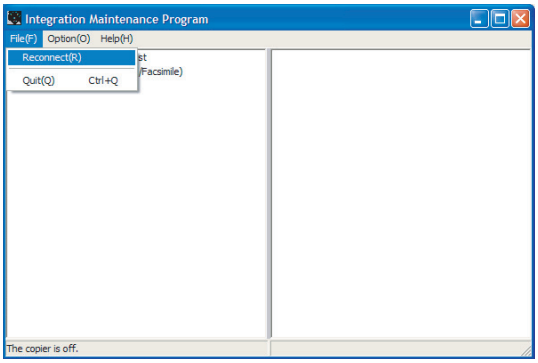

6) PC side:
Confirm a tree is displayed under the "Special (MCU/Panel/Facsimile)" on the maintenance program". (If no tree is displayed, confirm that the USB is connected and select the "Reconnect" (the above 5) again.)

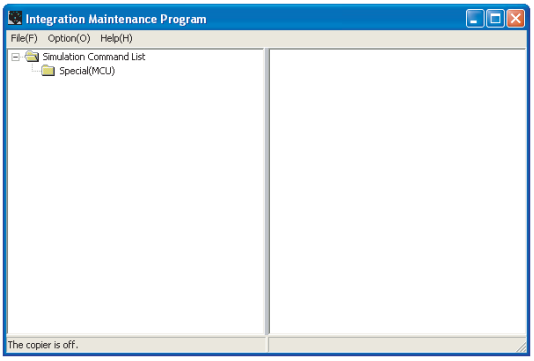

7) PC side:
Double click "Special (MCU/Panel/Facsimile)" in the main tree item to develop the sub tree items, and double click "DWL Download" in the sub tree items.

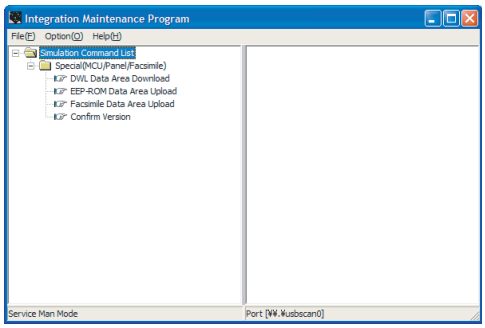

8) PC side:
Specify the download file (*.dwl).

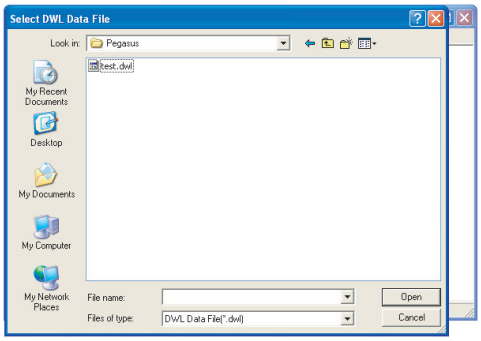

9) PC side:
The download file is specified, download is automatically performed.

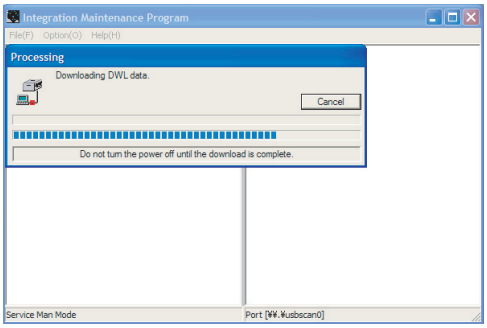

10) PC side:
When the message below is displayed, download is completed.
Completion message:
Download is completed. Do not turn the Machine power off until "Processing finished. Turn off the power." is displayed on the Machine.

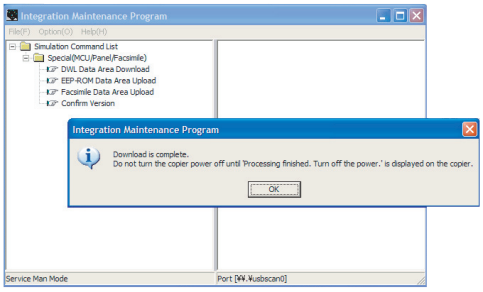

NOTE (Important):
•Be sure that the power is not turned off and the USB cable is not removed until the word "OFF" appears.

11) Main body side:
Wait until the word "Processing finished.Turn off the power." appears on the operation panel.
The appearance of "Processing finished.Turn off the power." indicates the completion of the download (writing into ROM).
Turn the power off and the USB cable can be removed at this point.

12) After-process: Terminate the maintenance program, and turn on the power of the main body.

After the download (data transmission) has been completed, exit the software program. The USB cable can be removed at this point.

NOTE:
•For making a second connection with another machine, select the "File" and "Reconnect" in the menu bar on the maintenance program at the time of the USB being re-connected. Repeat the previous procedures from the above 5).

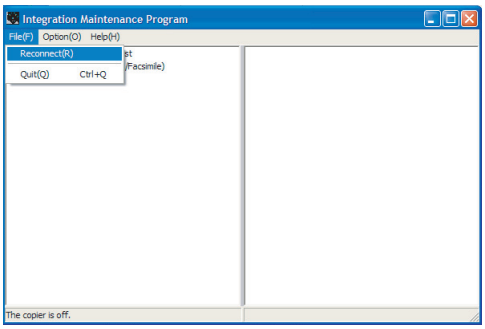

*** Forbidden actions while downloading (Important)**

Failure in the download concerned may not allow you to conduct the subsequent download procedures. Added care should be taken to avoid having the situation below arise while downloading.
•Switching off the main body.
•Disconnecting the download cable (USB cable).

*** If the above inhibit item occurs during downloading:**

Turn OFF and ON the power.
1) If "Download mode." (which means downloading) is displayed on the operation panel of the machine, perform downloading again.
2) If "Download mode." (which means downloading) is not displayed on the operation panel of the machine, turn OFF the power, and press and hold the 4 key and the CA key and turn ON the power. If, then, "Download mode." (which means downloading) is displayed on the operation panel LED of the machine, perform downloading again.
If "Download mode." is still not displayed, the MCU/Panel/Fax must be replaced.

3. Version confirming procedure

1) Main body side:
Executable by performing the Service Simulation No. 49-01 (Flash Rom program-writing mode).
(A word "Download mode." appears on the operation panel to denote the download mode status.)

2) Connect the PC and the main body with the download cable (USB cable).

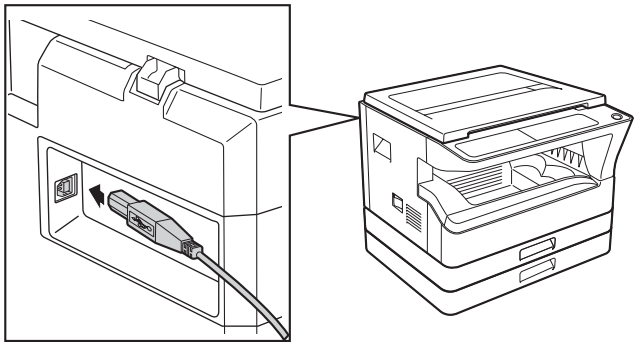

3) PC side:
Boot the maintenance program. Select the model icon.

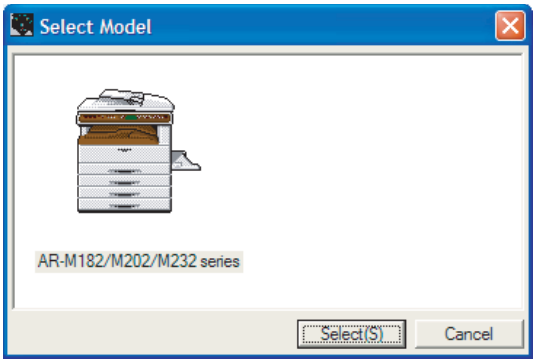

<Sample display>

4) PC side:
Confirm that the "Simulation Command List" tree is displayed on the maintenance program.

5) PC side:
When the message "the main body has not got started running" is displayed on the lowest area of the figure below after the "maintenance program" is started up, select the "File" and then "Reconnect" in the menu bar.

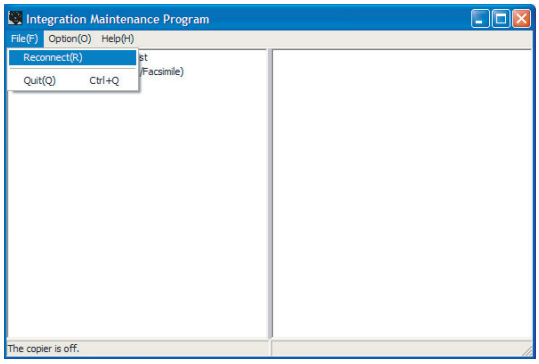

6) PC side:
Confirm a tree is displayed under the "Special (MCU/Panel/Facsimile)" on the maintenance program". (If no tree is displayed, confirm that the USB is connected and select the "Reconnect" (the above 5) again.)

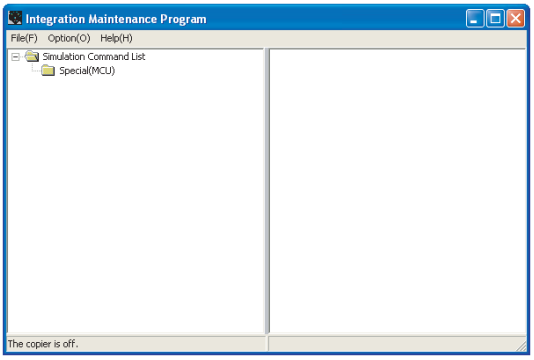

7) PC side:
Double click "Special (MCU/Panel/Facsimile)" in the main tree item to develop the sub tree items, and double click "Confirm version" in the sub tree items.

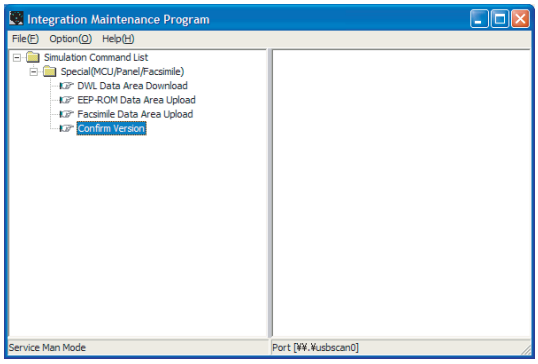

8) Check to confirm that the display below is indicated.

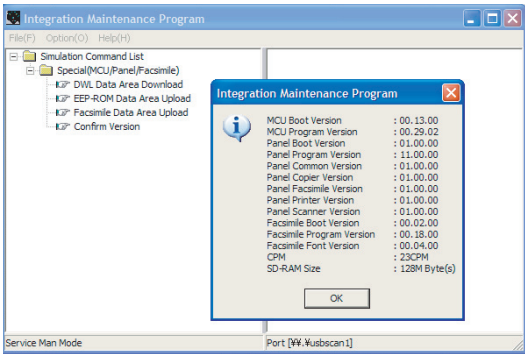

Version confirming is completed with the following procedures:

- In version confirming, "**.**.**" means that connection is not made with the MCU PWB or that download is not performed. (The above figure shows the case where the FAX PWB is not installed.)
- When download is completed, the version number is displayed such as the MCU boot version and the MCU program version.
- The CPM and the SD-RAM size are displayed when the MCU/Panel PWB is installed and the boot section operates normally.

4. Facsimile Data upload procedure

1) Main body side:
Executable by performing the Service Simulation No. 49-01 (Flash Rom program-writing mode).
(A word "Download mode." appears on the operation panel to denote the download mode status.)

2) Connect the PC and the main body with the download cable (USB cable).

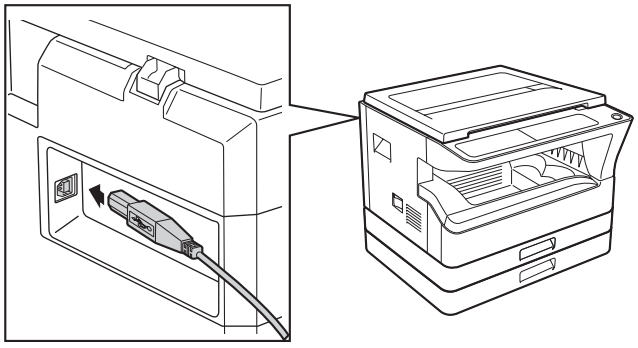

3) PC side:
Boot the maintenance program. Select the model icon.

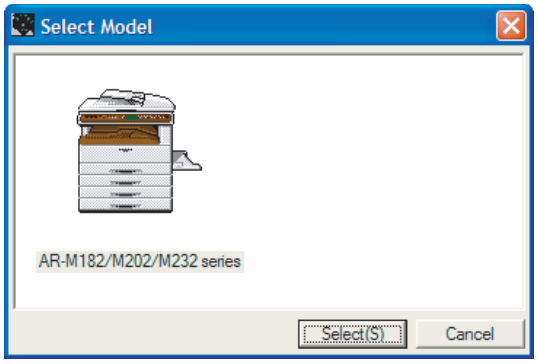

<Sample display>

4) PC side:
Confirm that the "Simulation Command List" tree is displayed on the maintenance program.

5) PC side:
When the message "the main body has not got started running" is displayed on the lowest area of the figure below after the "maintenance program" is started up, select the "File" and then "Reconnect" in the menu bar.

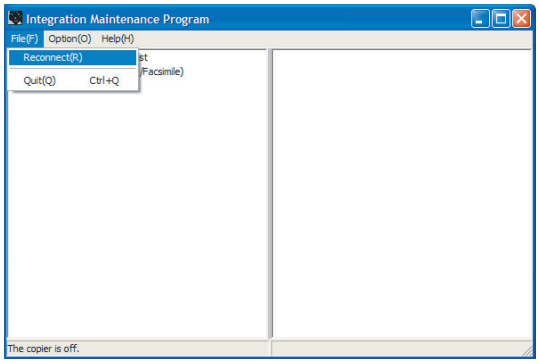

6) PC side:
Confirm a tree is displayed under the "Special (MCU/Panel/Facsimile)" on the maintenance program". (If no tree is displayed, confirm that the USB is connected and select the "Reconnect" (the above 5) again.)

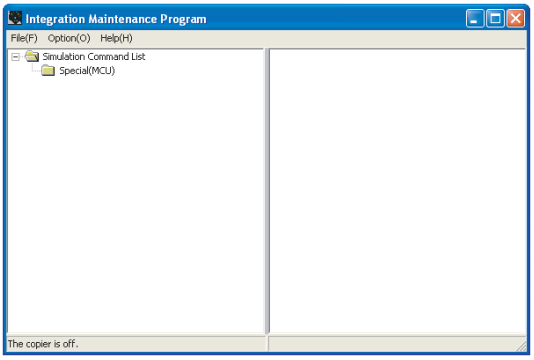

7) PC side:
Double click "Special (MCU/Panel/Facsimile)" in the main tree item to develop the sub tree items, and double click "Facsimile Data Area Upload" in the sub tree items.

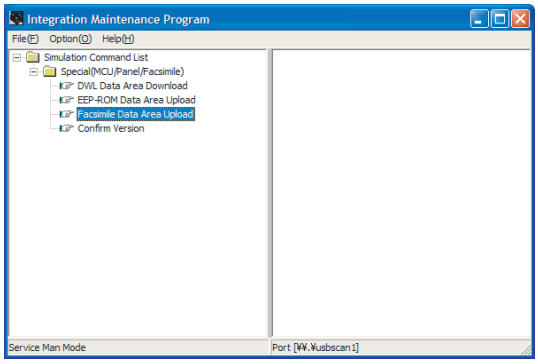

8) PC side:
Enter an optional file name, and select "Save."

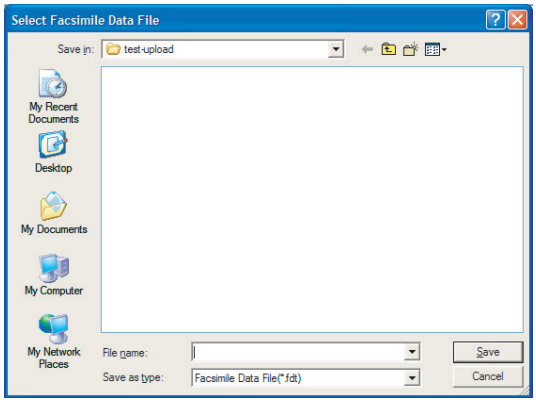

9) PC side:
The following message is displayed, and uploading the FAX data is started.

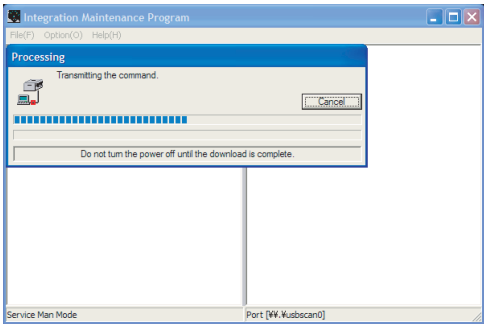

10) PC side:
When the message below is displayed, upload is completed.
Completion message:
Upload is completed. Do not turn the Machine power off until "Processing finished. Turn off the power." is displayed on the Machine.

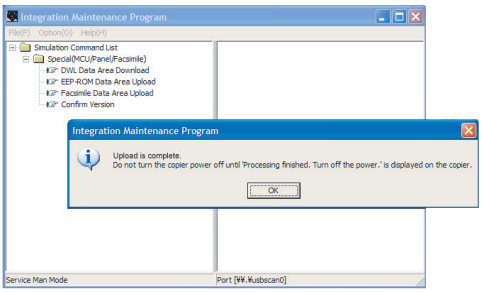

11) Main body side:
Wait until the message of "Processing finished. Turn off the power." is displayed. The above message indicates completion of uploading the FAX data. Then turn OFF the power and disconnect the USB cable.

With the above procedures, uploading the FAX data is completed.
The data acquired in "FAX data upload acquisition procedure" are saved in a file with the extension of ".fdt".

NOTE (Important):
- Do not perform uploading the FAX data with a machine which has no FAX PWB installed.
  If uploading the FAX data is tried with the machine which has no FAX PWB installed, the message of "Do not turn the power off." is kept remained on the main body side.
  [Canceling procedure] Turn OFF/ON the main body to cancel.
  PC side: "Command sending" is displayed. Two minutes later, "Communication error occurs." is displayed.
  [Canceling procedure] Disconnect the USB cable. Check to confirm that "Communication error occurs." is displayed, then click "OK." The error is canceled by the above procedures. Since write/delete process is not performed on the MCU, the PANEL, and the Flash ROM of the FAX, they will not affect the following operations.

5. Updating the MX-NB12 firmware

A. Preparation

Write the firmware (file with extension of brn) into the MX-NB12.

Necessary items for updating
- *.brn (Firmware)
- USB memory

Caution: The firmware (*.brn) must be copied to the root directory in the USB memory in advance.

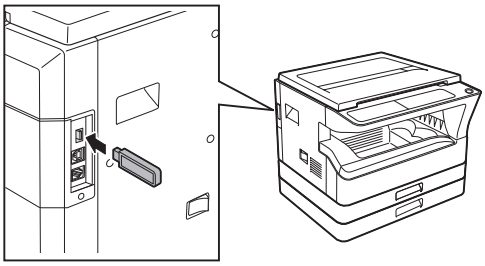

B. Updating procedures

1) Insert the USB memory into the machine.

Caution: Once the USB memory is inserted, never remove it until the procedure is completed.
The operations are enabled only when the MX-NB12 is active.
It takes 30 seconds for the MX-NB12 from turning ON the power to activating. When turning ON the power, therefore, wait for 30 seconds before executing SIM49-02.
Once the process is started, never disconnect the USB memory until the end of the process.
It is allowed to save only one NNB download file (*.bm file) in the root directory of the USB memory.

2) Machine side
Execute the service simulation No. 49-02 (Network board firmware download mode). (Check to confirm that the display below is indicated on the screen.)
3) "Download mode" is displayed on the operation panel display.

Download mode.

4) "Do not turn the power off." is displayed, and downloading of the firmware is started.

Do not turn the
power off.

5) When downloading is completed, "Processing is finished. Turn off the power." is displayed.

Processing finished.
Turn off the power.

During execution of the simulation, do not perform a key operation of the operation panel.
6) Turn OFF the power of the machine.
7) Check to confirm that the machine is turned OFF, and remove the USB memory from the machine.
Updating is completed with the above operation.

6. Installation procedure

A. USB joint maintenance program installation

The driver is installed by plug and play.

B. Installation procedure on Windows XP

1) Machine side:
   Executable by performing the Service Simulation No. 49-01 (Flash Rom program-writing mode).
   (A word "Download mode." appears on the operation panel to denote the download mode status.)

2) Connect the machine and the PC with a USB cable.

3) Check that the following display is shown.
   Select "Install from a list or the specific location" and press the NEXT button.

4) Select "Include this location in the serch". If the retrieval area does not include the folder which includes the maintenance tool driver (Mainte.inf), select "Browse"
   If the folder path is properly shown, press the NEXT button to go to procedure 7).

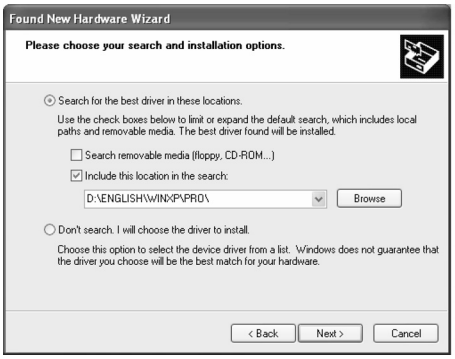

5) Select the folder which includes the maintenance tool driver (Mainte.inf), and press the OK button.
   (When the driver is included in the "C:\Sirius" folder:)

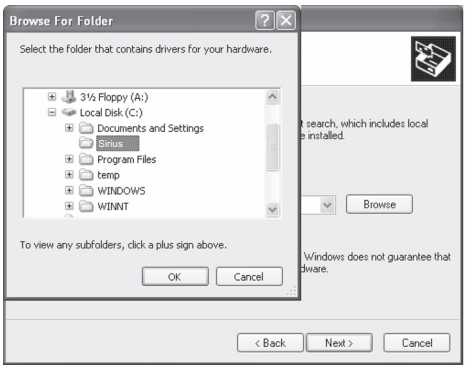

6) Check that the path to the folder which includes the maintenance tool driver (Mainte.inf) is shown, and press the NEXT button.

7)) Check that the following display is shown. Press the Continue Anyway button.

8) When installation is completed, the following display is shown.
   Press the Finish button.

The installation procedure (on Windows XP) is completed with the above operation.

C. Installation procedure on Windows 2000

1) Machine side:
   Executable by performing the Service Simulation No. 49-01 (Flash Rom program-writing mode).
   (A word "Download mode." appears on the operation panel to denote the download mode status.)

2) Connect the machine and the PC with a USB cable.

3) Check that the new hardware search wizard is shown. Press the NEXT button.

4) Select "Serch for a suitable driver for my device" and press the NEXT button.

5) Select "Specify a location" and press the NEXT button.

6) Press the "Browse" button. Specify the folder which includes the maintenance tool driver (Mainte.inf)

7) Specify the folder which includes the maintenance tool driver (Mainte.inf), and press the OPEN button.
   Check that the path to the folder which includes the maintenance tool driver (Mainte.inf) is properly displayed, and press the OK button.
   (When the maintenance tool driver is included in the folder of "D:\Sirius")

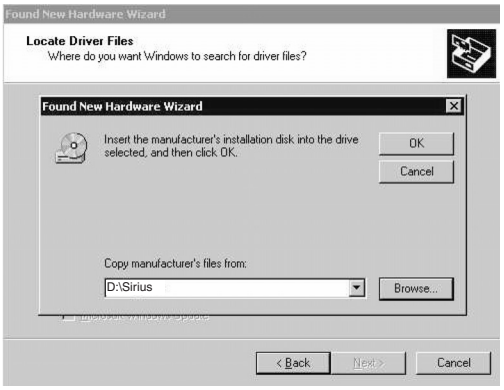

8) Press the NEXT button, and installation is started.

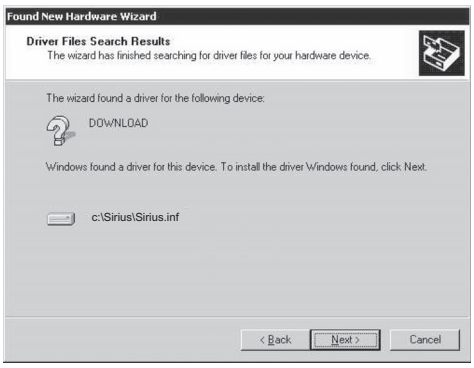

9) When installation is completed, the following display is shown.
   Press the Finish button.

The installation procedure of the joint maintenance program on Windows 2000 is completed with the above operation.

[13] IP ADDRESS SETTING

1. Setting the ip address of the machine by system settings

Set the IP address of the machine in the system settings.
The procedure for selecting a system setting is explained in "SELECTING A SETTING FOR A SYSTEM SETTING" in the Operation Guide for the machine.

A. Enabling/disabling DHCP

This is used to set Enable/Disable of DHCP (Dynamic Host Configuration Protocol). When it is set to Enable, the IP address is automatically acquired from the DHCP server, allowing connection to the network without manual input of the IP address.

B. Setting the ip address automatically

When the DHCP is set to Enable, the IP address of the machine can be checked by the following operation.

1) Turn the machine power off and then back on.

2) Select the IP address setting with the network setting of the system setting at DHCP Enable.
The IP address, the sub net mask, and the default gateway assigned automatically to the machine can be checked.

Note: If DHCP is used, the IP address assigned to the machine may change automatically. If the IP address changes, printing will not be possible.

C. Setting/changing the ip address manually

Perform the following procedure to use a fixed IP address.

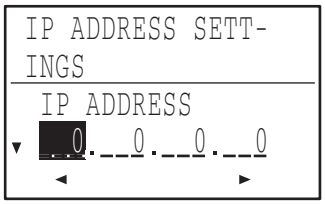

1) Enter the IP address, subnet mask, and default gateway.

[▼][▲] keys	These move the cursor up and down to select "IP ADDRESS", "SUBNETMASK", and "DEFAULT GATEWAY".
[◀][▶] keys	These move the cursor left and right.
Numeric keys	These are used to enter numbers.
[C] key (C)	Use this to cancel an entry.
[BACK] key	This cancels an entry and returns you to the previous screen.
[CA] key (CA)	This cancels the setting and returns the display to the base screen of the mode that was in effect before the system settings were entered.
[SPECIAL FUNCTION] key	This cancels the setting and returns the display to the base screen of the mode that was in effect before the system settings were entered.

Note: You cannot change the IP address if DHCP is set to on.

2) When you have completed all settings, press the [OK] key.
The settings will be saved after the message "Your setting will be valid after you power down and then restart the copier." disappears.

3) Turn off the machine power, wait for a few seconds, and then turn on the power again.
The new settings will take effect after the power is turned on.

[14] ELECTRICAL SECTION

1.Block diagram

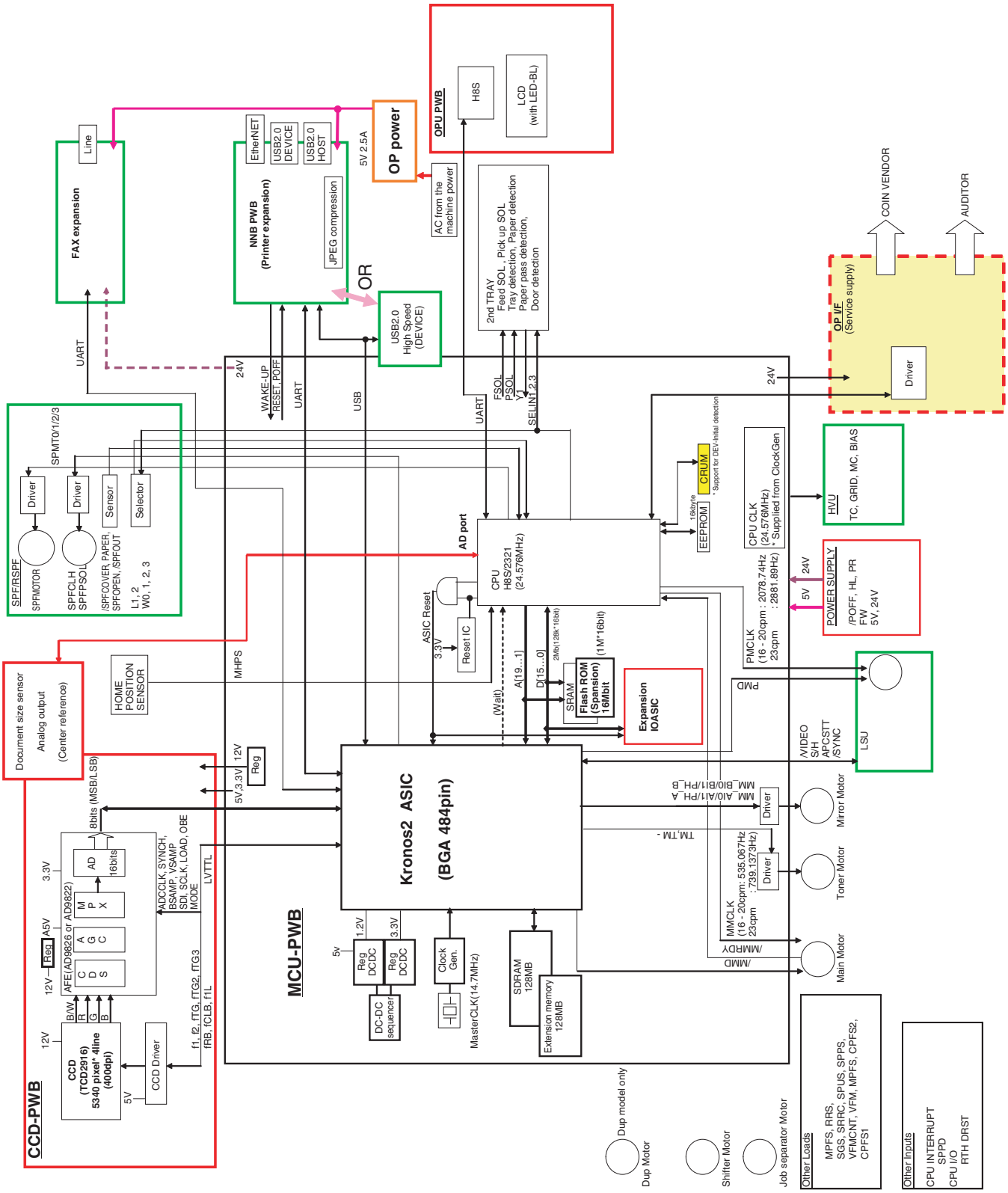

2.Actual wiring diagram

ACTUAL WIRING DIAGRAM 1/8

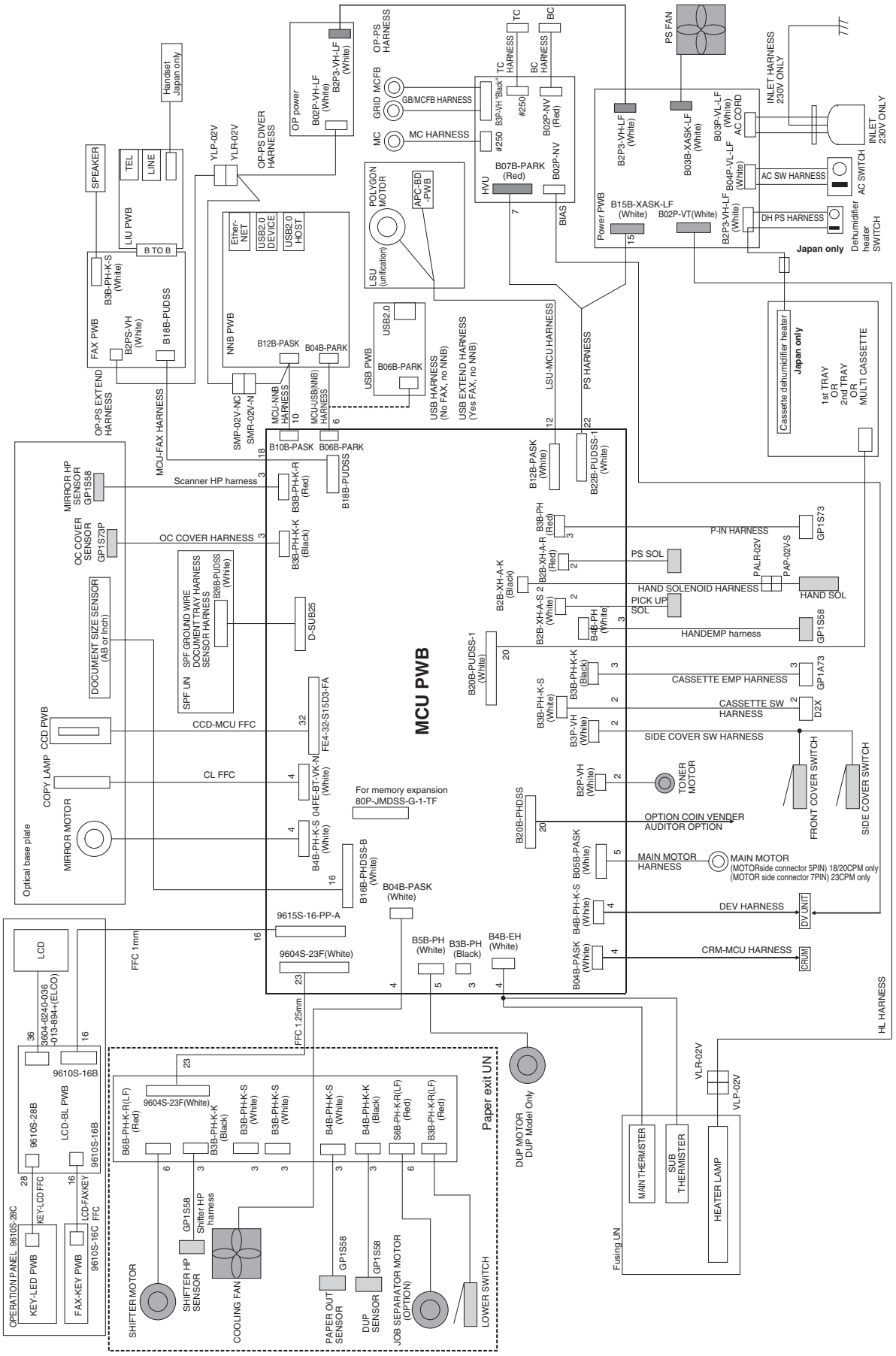

ACTUAL WIRING DIAGRAM 2/8

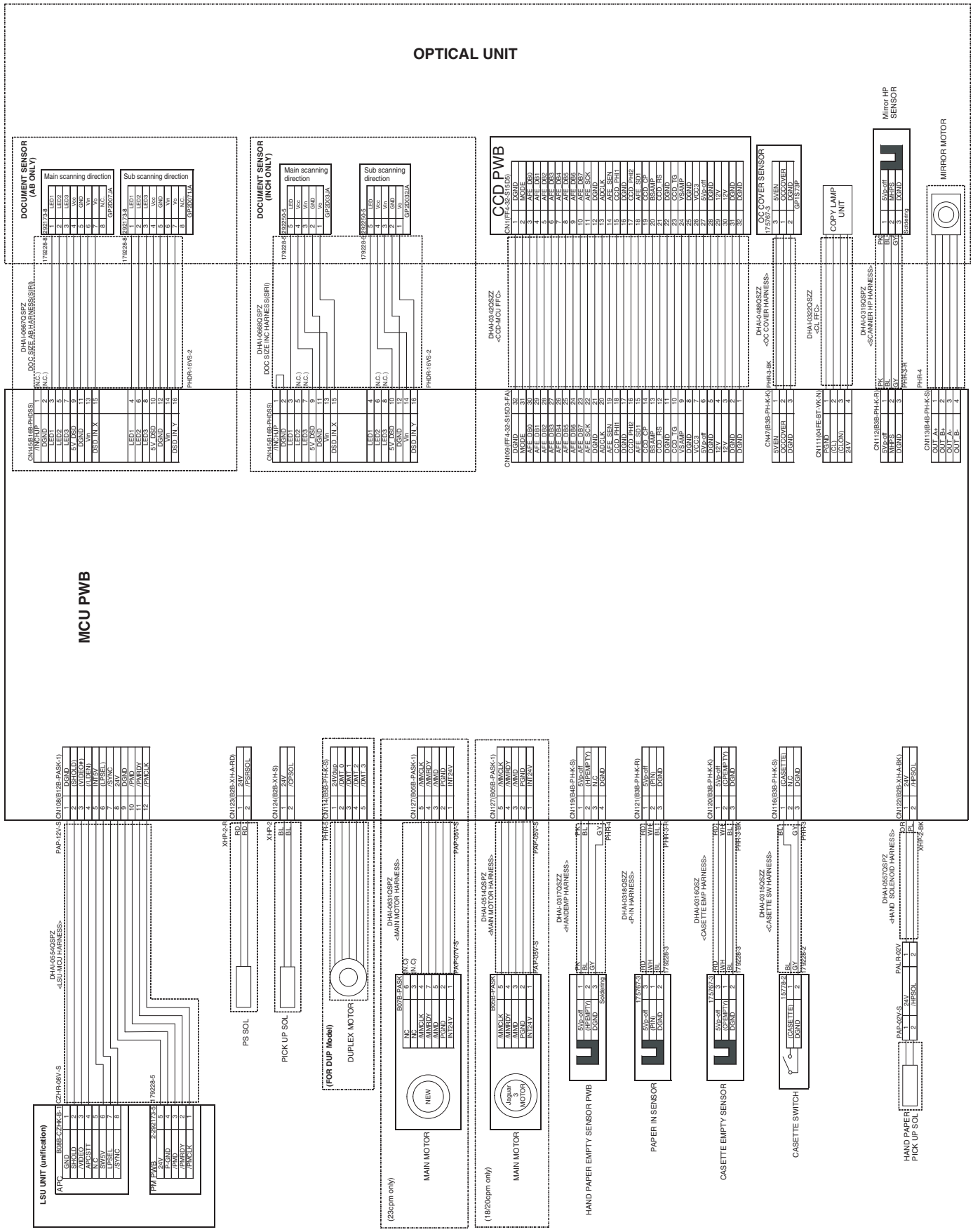

ACTUAL WIRING DIAGRAM 3/8

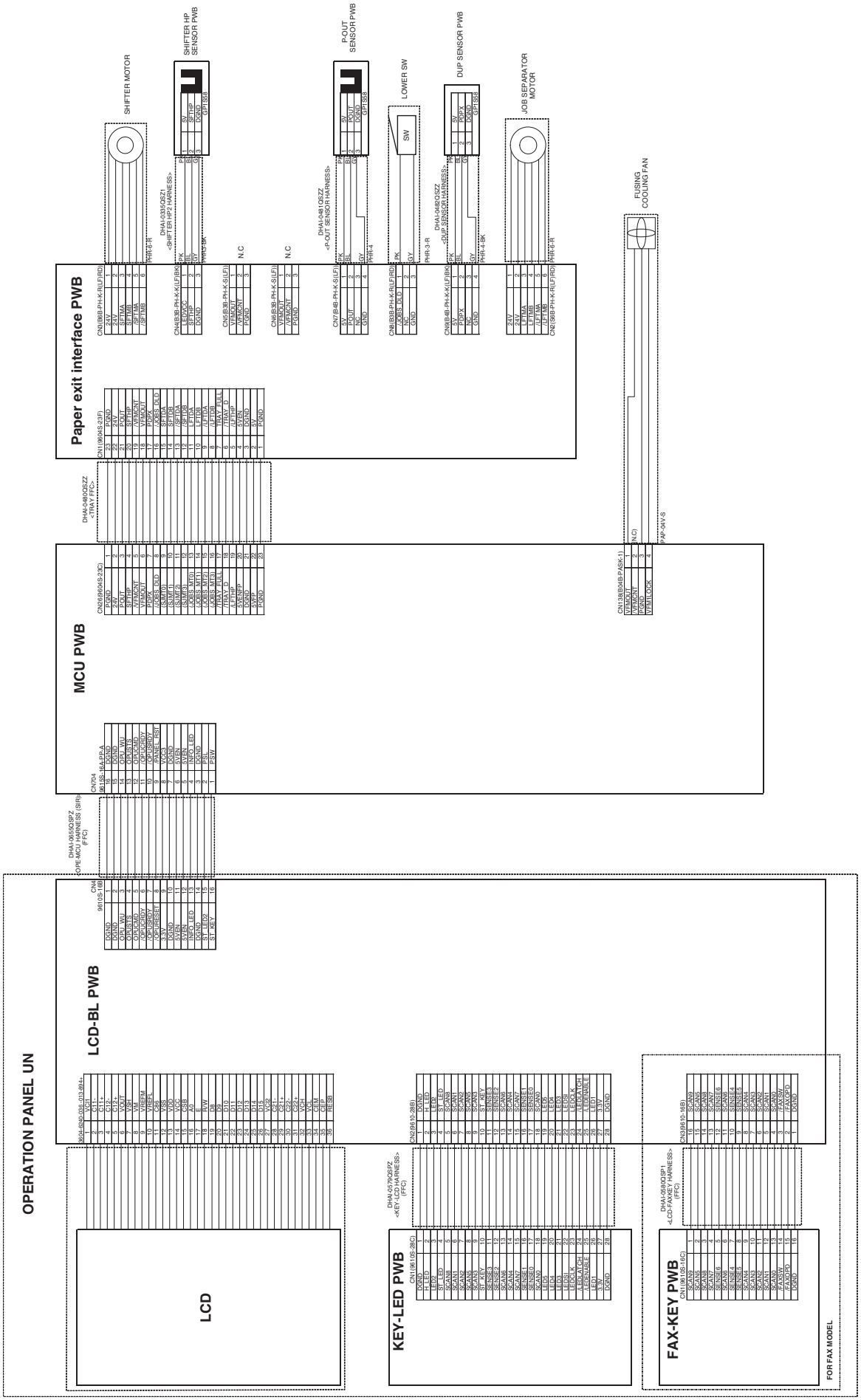

ACTUAL WIRING DIAGRAM 4/8

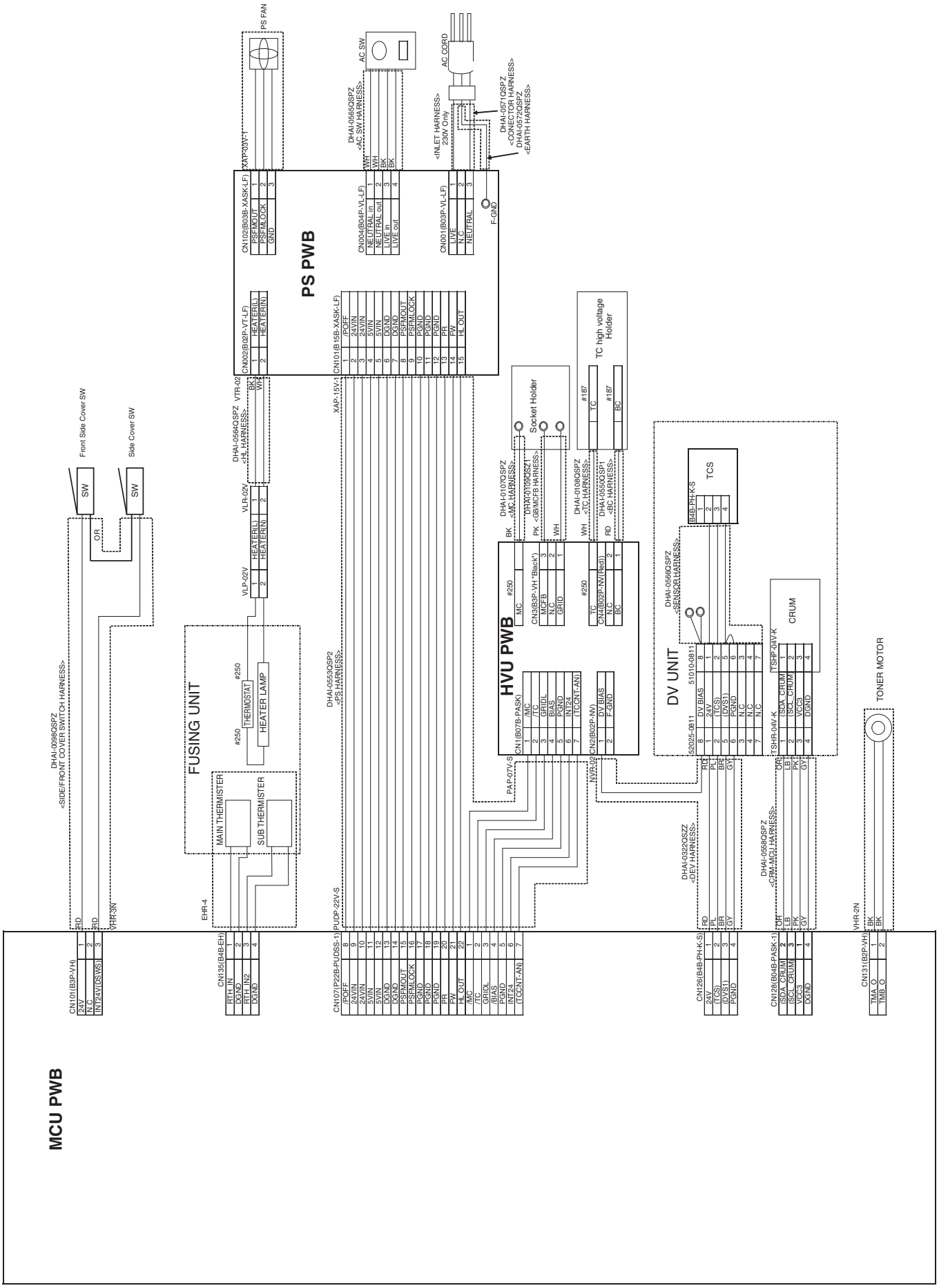

ACTUAL WIRING DIAGRAM 5/8

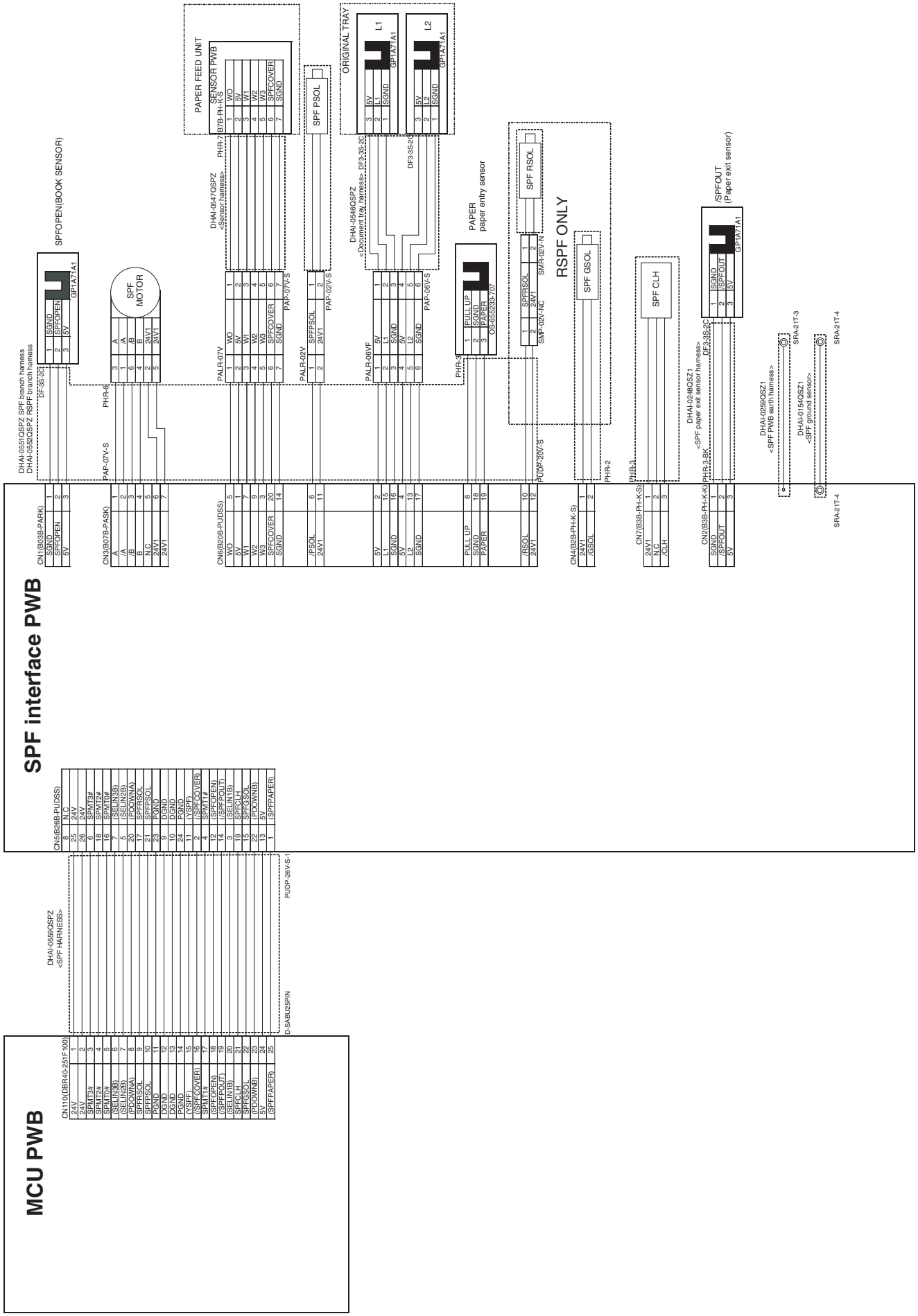

ACTUAL WIRING DIAGRAM 6/8

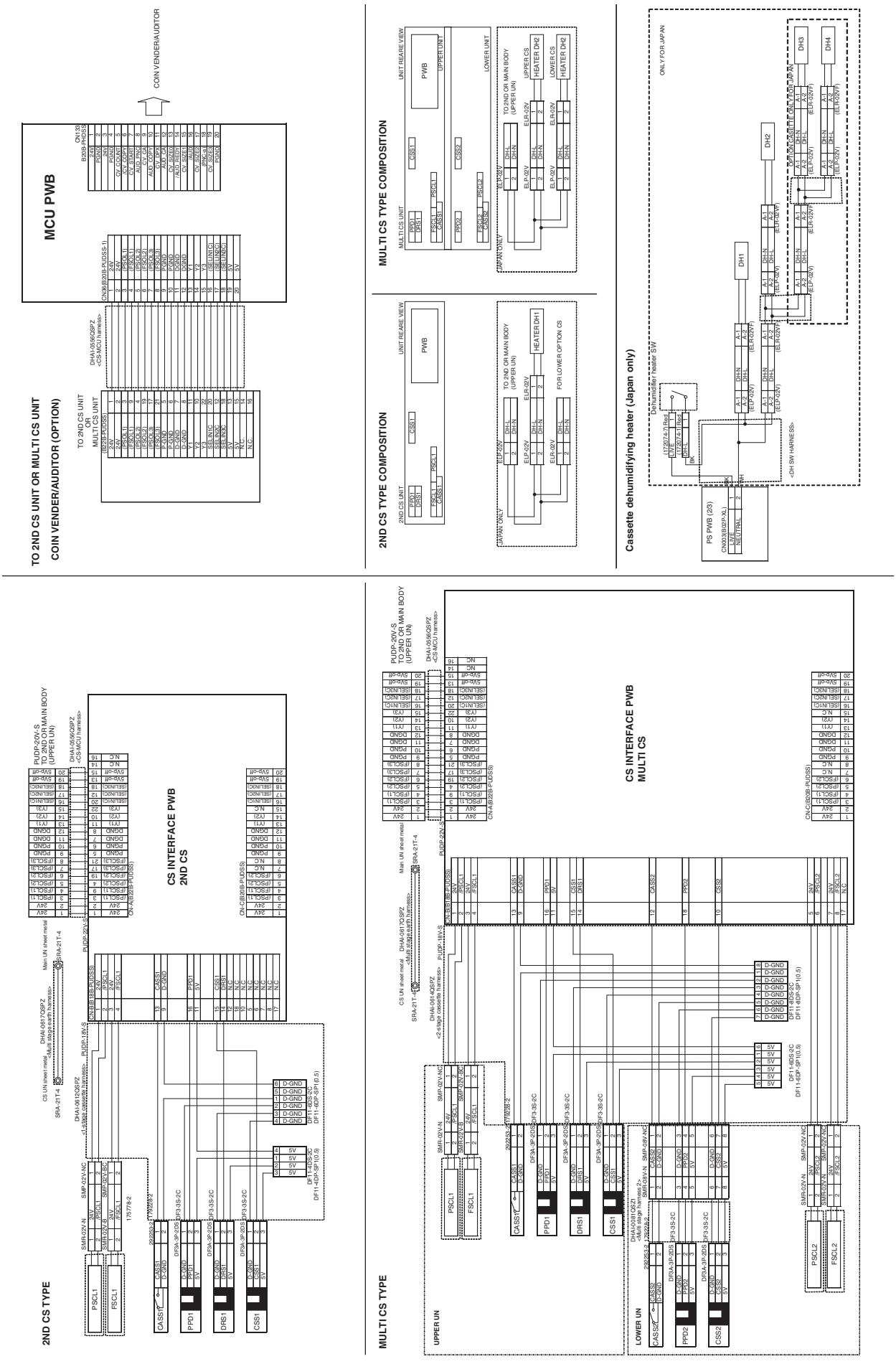

ACTUAL WIRING DIAGRAM 7/8

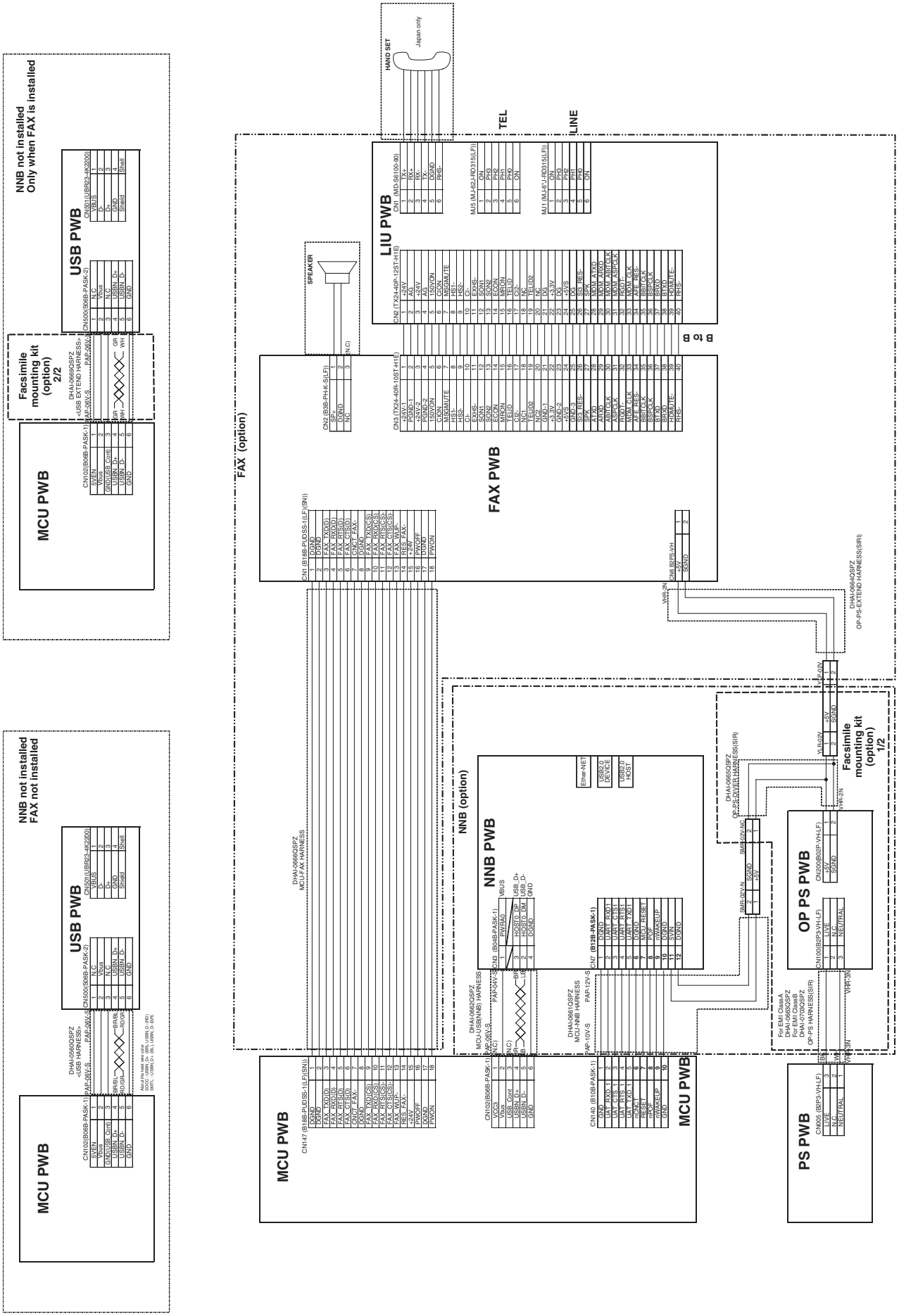

ACTUAL WIRING DIAGRAM 8/8

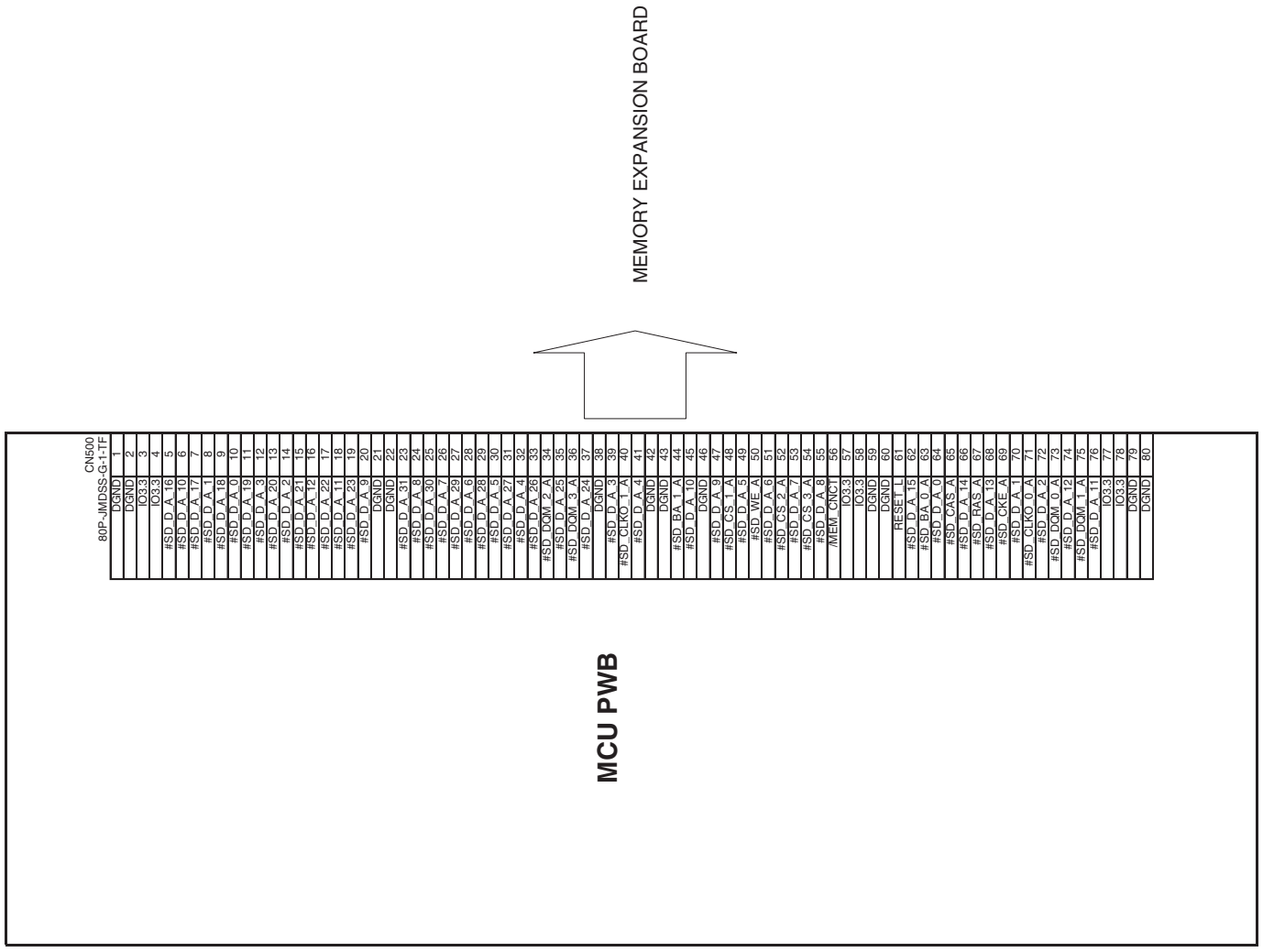

Memo

Memo

LEAD-FREE SOLDER

The PWB's of this model employs lead-free solder. The "LF" marks indicated on the PWB's and the Service Manual mean "Lead-Free" solder. The alphabet following the LF mark shows the kind of lead-free solder.

Example:

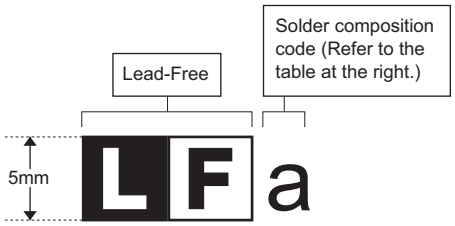

<Solder composition code of lead-free solder>

Solder composition	Solder composition code
Sn-Ag-Cu	a
Sn-Ag-Bi Sn-Ag-Bi-Cu	b
Sn-Zn-Bi	z
Sn-In-Ag-Bi	i
Sn-Cu-Ni	n
Sn-Ag-Sb	s
Bi-Sn-Ag-P Bi-Sn-Ag	p

(1) NOTE FOR THE USE OF LEAD-FREE SOLDER THREAD

When repairing a lead-free solder PWB, use lead-free solder thread.

Never use conventional lead solder thread, which may cause a breakdown or an accident.

Since the melting-point of lead-free solder thread is about 40°C higher than that of conventional lead solder thread, the use of the exclusive-use soldering iron is recommended.

(2) NOTE FOR SOLDERING WORK

Since the melting-point of lead-free solder is about 220°C, which is about 40°C higher than that of conventional lead solder, and its soldering capacity is inferior to conventional one, it is apt to keep the soldering iron in contact with the PWB for longer time. This may cause land separation or may exceed the heat-resistive temperature of components. Use enough care to separate the soldering iron from the PWB when completion of soldering is confirmed.

Since lead-free solder includes a greater quantity of tin, the iron tip may corrode easily. Turn ON/OFF the soldering iron power frequently.

If different-kind solder remains on the soldering iron tip, it is melted together with lead-free solder. To avoid this, clean the soldering iron tip after completion of soldering work.

If the soldering iron tip is discolored black during soldering work, clean and file the tip with steel wool or a fine filer.

CAUTION FOR BATTERY REPLACEMENT

(Danish) ADVARSEL !

Lithiumbatteri – Eksplosionsfare ved fejlagtig håndtering.
Udskiftning må kun ske med batteri
af samme fabrikat og type.
Levér det brugte batteri tilbage til leverandoren.

(English) Caution !

Danger of explosion if battery is incorrectly replaced.
Replace only with the same or equivalent type
recommended by the manufacturer.
Dispose of used batteries according to manufacturer's instructions.

(Finnish) VAROITUS

Paristo voi räjähtää, jos se on virheellisesti asennettu.
Vaihda paristo ainoastaan laitevalmistajan suosittelemaan
tyyppiin. Hävitä käytetty paristo valmistajan ohjeiden
mukaisesti.

(French) ATTENTION

Il y a danger d'explosion s' il y a remplacement incorrect
de la batterie. Remplacer uniquement avec une batterie du
même type ou d'un type équivalent recommandé par
le constructeur.
Mettre au rebut les batteries usagées conformément aux
instructions du fabricant.

(Swedish) VARNING

Explosionsfara vid felaktigt batteribyte.
Använd samma batterityp eller en ekvivalent
typ som rekommenderas av apparattillverkaren.
Kassera använt batteri enligt fabrikantens
instruktion.

(German) Achtung

Explosionsgefahr bei Verwendung inkorrekter Batterien.
Als Ersatzbatterien dürfen nur Batterien vom gleichen Typ oder
vom Hersteller empfohlene Batterien verwendet werden.
Entsorgung der gebrauchten Batterien nur nach den vom
Hersteller angegebenen Anweisungen.

CAUTION FOR BATTERY DISPOSAL

(For USA, CANADA)

"BATTERY DISPOSAL"

THIS PRODUCT CONTAINS A LITHIUM PRIMARY (MANGANESS DIOXIDE) MEMORY BACK-UP BATTERY THAT MUST BE DISPOSED OF PROPERLY. REMOVE THE BATTERY FROM THE PRODUCT AND CONTACT YOUR LOCAL ENVIRONMENTAL AGENCIES FOR INFORMATION ON RECYCLING AND DISPOSAL OPTIONS.

"TRAITEMENT DES PILES USAGÉES"

CE PRODUIT CONTIENT UNE PILE DE SAUVEGARDE DE MÉMOIRE LITHIUM PRIMAIRE (DIOXYDE DE MANGANÈSE) QUI DOIT ÊTRE TRAITÉE CORRECTEMENT. ENLEVEZ LA PILE DU PRODUIT ET PRENEZ CONTACT AVEC VOTRE AGENCE ENVIRONNEMENTALE LOCALE POUR DES INFORMATIONS SUR LES MÉTHODES DE RECYCLAGE ET DE TRAITEMENT.

SHARP

COPYRIGHT © 2011 BY SHARP CORPORATION

All rights reserved.
Produced in Japan for electronic Distribution
No part of this publication may be reproduced,
stored in a retrieval system, or transmitted,
in any form or by any means,
electronic; mechanical; photocopying; recording or otherwise
without prior written permission of the publisher.

Trademark acknowledgements

- Microsoft®, Windows®, Windows® 98, Windows® Me, Windows NT® 4.0, Windows® 2000, Windows® XP, Windows® Vista, Windows® 7, Windows® Server 2003, Windows® Server 2008 and Internet Explorer® are registered trademarks or trademarks of Microsoft Corporation in the U.S.A. and other countries.
- PostScript is a registered trademark of Adobe Systems Incorporated.
- Macintosh, Mac OS, AppleTalk, EtherTalk, Laser Writer, and Safari are registered trademarks or trademarks of Apple Computer, Inc.
- IBM, PC/AT, and Power PC are trademarks of International Business Machines Corporation.
- Acrobat® Reader Copyright® 1987- 2002 Adobe Systems Incorporated. All rights reserved. Adobe, the Adobe logo, Acrobat, and the Acrobat logo are trademarks of Adobe Systems Incorporated.
- PCL is a registered trademark of the Hewlett-Packard Company.
- Sharpdesk is a trademark of Sharp Corporation.
- All other trademarks and copyrights are the property of their respective owners.

SHARP CORPORATION
Document Solutions Group
CS Promotion Center
Yamatokoriyama, Nara 639-1186, Japan
2011 November Produced in Japan for electronic Distribution